LC102
AUTO-Z
Capacitor-Inductor Analyzer

Operation, Application, and Maintenance Manual

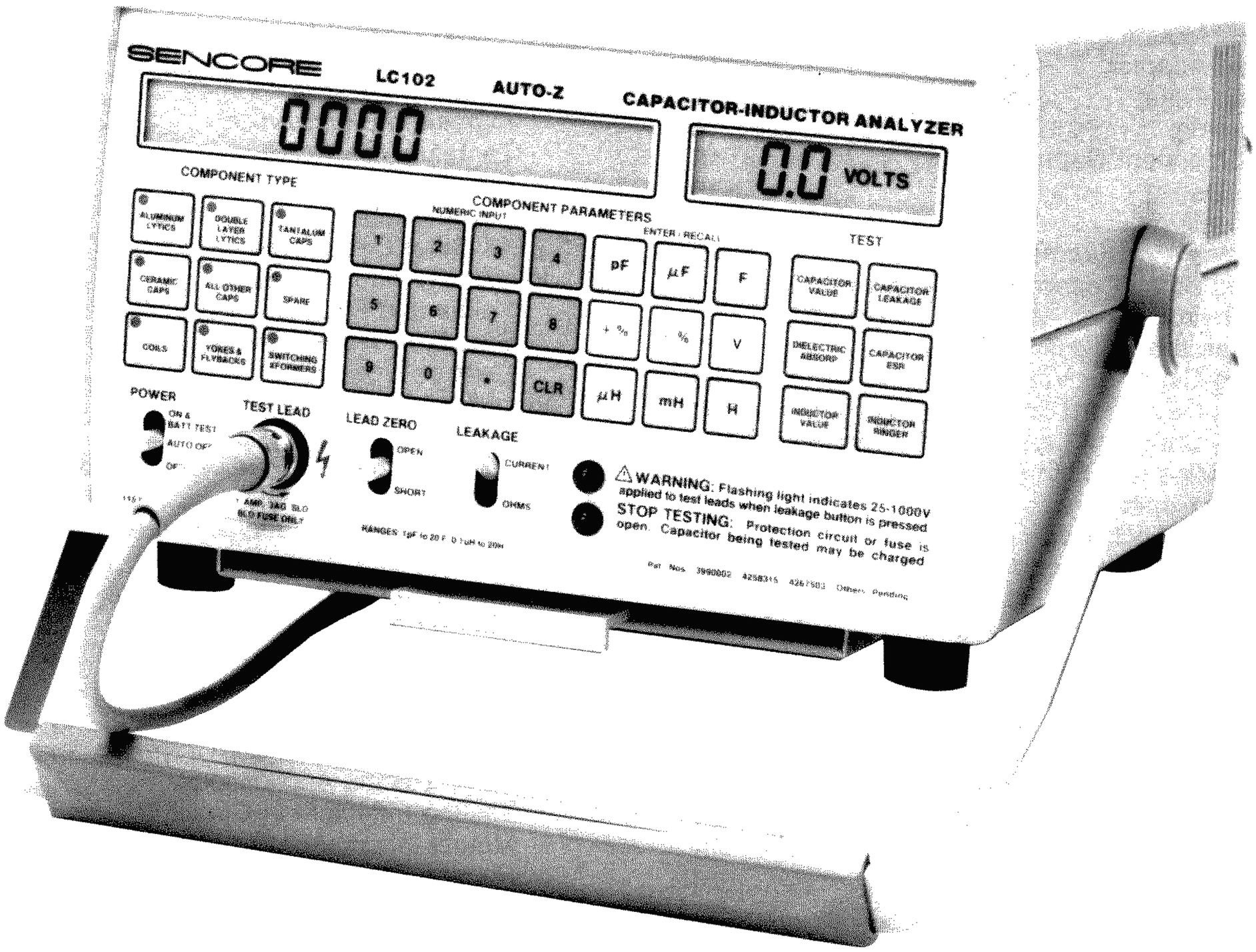

SENCORE

3200 Sencore Drive, Sioux Falls, South Dakota 57107

TABLE OF CONTENTS

SAFETY PRECAUTIONS ..... **Inside Front Cover**

SIMPLIFIED OPERATIONS **4**

DESCRIPTION
- Introduction 6
- Features 6
- Specifications 6
- Controls 8
- Rear Panel Features 10
- Supplied Accessories 10a
- Optional Accessories 10b

OPERATION
- Introduction 12
- AC Power Operation 12
- Battery Operation 12
  - Battery Test 13
  - Recharging the Battery 14
  - Auto Off 14
- STOP TESTING Indication 14
- Test Leads 14
  - Test Lead Mounting Clip 15
  - Test Lead Adapter 15
  - Test Lead Fuse 15
  - Lead Zeroing 16
- Entering Component Data 16
  - Error Codes 18
- Capacitor Testing 19
  - Capacitance Measurement Accuracy 19
  - Measuring Small Capacitance Values in Noisy Environments 20
- Capacitor Parameter Testing 20
  - Measuring Capacitor Value 20
  - Measuring Capacitor Dielectric Absorption 20
  - Measuring Capacitor Leakage (Microamps) 21
    - Paper, Mica and Film Capacitor 22
    - Ceramic Capacitors 22
    - Aluminum Electrolytics 22
    - Tantalum Electrolytics 22
    - Non-polarized Electrolytics 22
  - Leakage Charts 22
    - Aluminum Electrolytics 23
    - Tantalum Electrolytics 24
  - Measuring Capacitor Leakage (ohms) 24
  - Measuring Capacitor ESR 25
- Capacitor Automatic GOOD/BAD Testing 26
- Inductor Testing 29
  - Balancing Out Lead Inductance 29
  - Inductor Value Testing 30
- Inductor Automatic GOOD/BAD Testing 30
  - Checking Inductors with the Ringer Test 30
  - GOOD/BAD Inductor Value Testing 31

IEEE 488 BUSS OPERATION
- Connecting the LC102 for IEEE Operation 31
- Sending Data to the LC102 32
  - Component Type Commands 33
  - Value Multipliers 33
  - Test Function Commands 34
  - General Commands 35
- Reading Data from the LC102 35
  - Data Format 36
  - Separating Data Fields 36
- Advanced Programming Ideas 37
  - Error Testing 37
  - GOOD/BAD Results 37
  - Shorted Capacitors 38
  - Open Inductors 38
  - Making Leakage Tests with IEEE 38
  - Making ESR Tests with IEEE 38
- Programming Examples 39
  - Sending Listener Codes 39
  - Sending Talker Codes 39
  - Sample Programs 40

APPLICATIONS
- Introduction 44
- Indentifying Capacitor Types 44
  - Aluminum Electrolytics 45
  - Tantalum Electrolytics 45
  - Double Layer Electrolytics 46
  - Ceramic Capacitors 46
  - All Other Capacitors 47
- Identifying Inductor Types 47
  - Yokes and Flybacks 47
  - Switching Transformers 47
  - Coils 48
- Identify Unknown Components 48
- Capacitor Testing Applications 49
  - Interpreting Capacitor Value Readings 49
  - Dielectric Stress 49
  - Checking Leakage in Multi-Section Lytics 49
  - Intermittent Capacitors 50
  - Checking Ceramic Temperature Characteristics 50
  - Checking Capacitance of Silicon Diodes and Transistors 50
  - Testing High Voltage Diodes 51
  - Reforming Electrolytics 51
- Inductor Testing Applications 52
  - Testing Inductors In-Circuit 52
  - Mutual Inductance 52
  - Ringing Peaking Coils 52
  - Ringing Metal Shielded Coils 53
  - Ringing Flyback Transformers 53
  - Ringing Deflection Yokes 54
  - Note on Solid State Yokes & Flybacks 55

Cable Testing Applications 55
Testing Coaxial Cable 55
Determining the Distance to Open 55
Locating a Short in Coaxial Cable 56
Determining Capacitance & Inductance per foot 57
Using the LC102 to Find Aging Cable 57
Hi Potential Testing 57
Measuring Resistor to 1 Gigohm 58
Applications of the Leakage Power Supply 58

MAINTENANCE
Introduction 59
Recalibration and Service 59
Circuit Description and Calibration Procedures . . . 59
Replacement Leads 59
"Spare" Button 59
Test Lead Fuse 59
Fuse Replacement 59
Display Test 59

APPENDIX
Capacitor Theory and the AUTO-Z 60
Capacitor Types 61
Ceramics 61
Aluminum Electrolytics 62
Tantalum Electrolytics 62
A Capacitor is more than a Capacitor 63
Leakage 63
Dielectric Absorption 63
Effective Series Resistance 64
Value Change 64

SIMPLIFIED OPERATIONS

Capacitor Parameter Tests

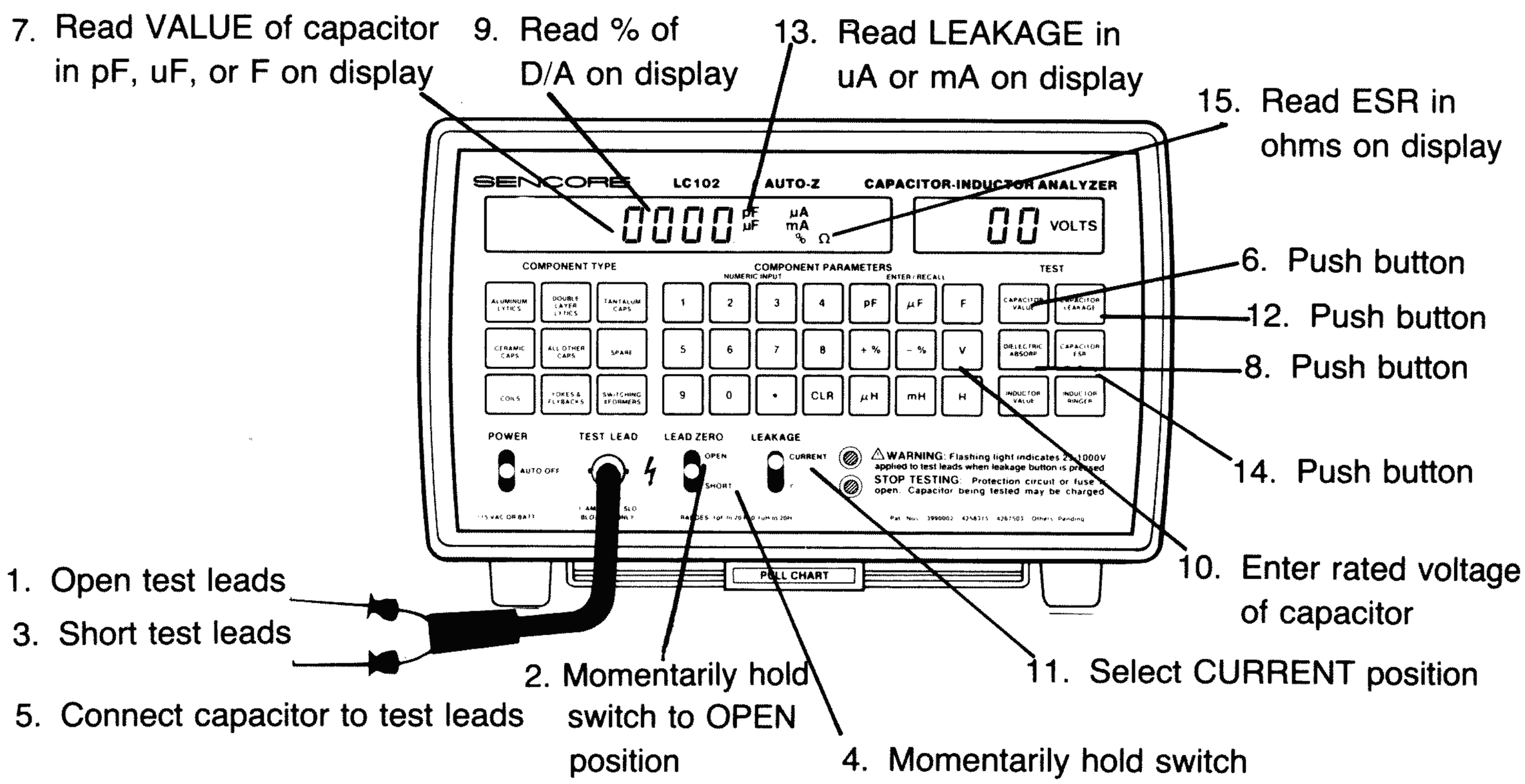

Inductor Parameter Tests

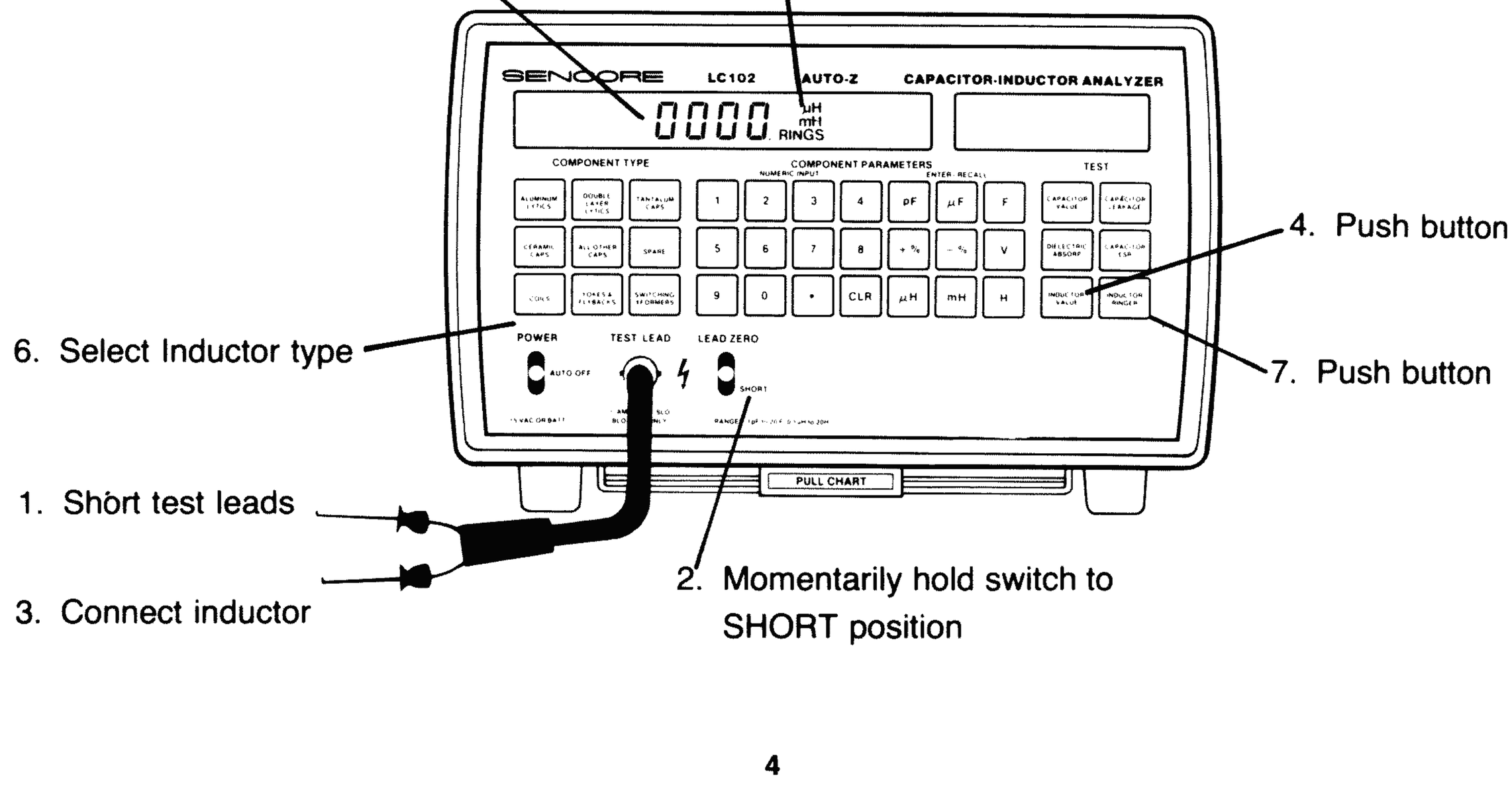

DESCRIPTION

Introduction

Capacitor and inductor usage is extensive, encompassing all facets of industrial and consumer electronics. Very few circuits lack either of these components. As the transistor gave way to the IC, and the IC gave way to the LSIC, so capacitor and inductor usage continues to increase rapidly since neither of these components can be physically incorporated into ICs on a broad basis. Though they have changed some in physical size, capacitors still perform the same basic functions. But in today's circuits, more than ever before, the tolerances and parameters of capacitors and inductors are critical to proper circuit operation.

Capacitor value and tight tolerance is just one important parameter. In today's high performance circuits, leakage, dielectric absorption, and ESR are necessary indicators of a capacitor's ability to perform properly in circuit. Inductors too, require tight tolerances and quality checks. Unless all of these parameters can be thoroughly analyzed, troubleshooting becomes a guessing game.

The Sencore LC102 AUTO-Z takes the guesswork out of capacitor and inductor testing. It provides automatic tests of capacitor value, leakage, ESR, and a patented dielectric absorption test. Inductors are automatically analyzed for value and quality with patented tests. The LC102 is a complete, automatic, microprocessor-controlled capacitor and inductor analyzer. Its features make it ideally suited for both single, component analyzing in service or maintenance work or for large volume, batch testing in a lab or incoming inspection.

Features

The Sencore LC102 AUTO-Z is a dynamic, portable, automatic capacitor and inductor tester. It is designed to quickly identify defective components by simply connecting the capacitor or inductor to the test leads and pushing a test button. The test result is readily displayed on an LCD readout in common terms. All capacitor and inductor test results may also be displayed as GOOD/BAD compared to standards adopted by the Electronic Industries Association (EIA). User defined limits may also be programmed into the LC102 for the GOOD/BAD comparison.

In addition to testing capacitors for value up to 20 Farads, the LC102 checks capacitors for leakage at their rated working voltage, up to 1000 volts. ESR is checked with a patented test, and an automatic, patented test checks capacitor dielectric absorption. A patented inductance value test provides a fast, accurate test of true inductance. A patented ringing test checks coils, deflection yoke, switching power supply transformers, and other non-iron core inductors with a fast, reliable GOOD/BAD quality test.

Automatic lead zeroing balances out test lead capacitance, resistance, and inductance for accurate readings on small capacitors and inductors. The LC102 is protected from external voltages applied to the test leads by a fuse in the TEST LEAD JACK and a special stop testing circuitry which locks out all test buttons when voltage is sensed on the test leads.

Battery operation makes the LC102 completely portable for on-location troubleshooting in all types of servicing from industrial equipment to avionics to cable fault locating. An optional SCR250 SCR & TRIAC TEST ACCESSORY extends the LC102 test capabilities to provide a fast, accurate test of these components. The LC102 may be interfaced into any computer interface system for fully automatic, computer controlled testing in a laboratory or incoming inspection area.

SPECIFICATIONS

DIGITAL READOUT

TYPE: .45", 6 digit, 7 segment LCD
READINGS: Fully autoranged with auto decimal placement. One or two place holding zeros added as needed to provide standard value readouts of pF, uF, F, uH or mH.
ANNUNCIATORS: pF, uF, F, uH, mH, H, uA, mA, %, V, kΩ, MΩ, Ω, RINGS, SHORT, OPEN, WAIT, GOOD, BAD

CAPACITORS (Out of circuit)

CAPACITOR VALUE

Dynamic test of capacity value is determined by measuring one RC time constant as capacitor is charged to +5 V through:
1.5 Megohms for 0 - .002 uF
15 Kilohms for .002 uF - 2 uF
Values above 2 uF are charged with a constant current of:
60 mA for 2uF - 2000uF
416 mA for 2000 uF - 19.99 F
Maximum voltage across capacitors larger than 2 uF limited to 1.75 V.

ACCURACY: +/−1% +/−1pF +/−1 digit for values to 1990 uF. +/−5% +/−.1% of range full scale for values 2000uF to 19.99 F.
RESOLUTION AND RANGES: 1.0 pF to 19.99 F, fully autoranged

.1 pF	1.0 pF to	199.9 pF
1 pF	200 pF to	1999 pF
.00001 uF	0.00200 uF to	0.01999 uF
.0001 uF	0.0200 uF to	0.1999 uF

.001 uF	0.200 uF to	1.999 uF
.01 uF	2.00 uF to	19.99 uF
.1 uF	20.0 uF to	199.9 uF
1 uF	200 uF to	1,999 uF
10 uF	2,000 uF to	19,990 uF
100 uF	20,000 uF to	199,900 uF
.001 F	0.200 F to	1.999 F
.01 F	2.00 F to	19.99 F

CAPACITOR LEAKAGE

READOUT: User selectable between leakage current and resistance
ACCURACY: +/−5% +/−1 digit
APPLIED VOLTAGE: Keyboard entry; 1.0 to 999.9 volts in .1 volt steps; accuracy +0 −5%. Short circuit current limited to 900mA, power limited to 6 watts.
RESOLUTION AND RANGES: .01uA to 20 mA, fully autoranged

.01 uA	0.01 uA to	19.99 uA
.1 uA	20.0 uA to	199.9 uA
1 uA	200 uA to	1999 uA
.01 mA	2.00 mA to	19.99 mA

CAPACITOR ESR (Test patented)

ACCURACY: +/−5% +/−1 digit
CAPACITOR RANGE: 1 uF to 19.99 F
RESOLUTION AND RANGES: .10 ohm to 2000 ohms, fully autoranged

.01 ohm	0.10 ohms to	1.99 ohms
.1 ohm	2.0 ohms to	19.9 ohms
1 ohm	20 ohms to	1999 ohms

CAPACITOR D/A (U.S. Patent #4,267,503)

ACCURACY: +/− 5% of reading +/− 1 count
RANGE: 1 to 100%
CAPACITOR RANGE: .01 uF to 19.99 F

INDUCTORS (In or out of circuit)

INDUCTANCE VALUE (U.S. Patent #4,258,315)

A dynamic test of value determined by measuring the EMF produced when a changing current is applied to the coil under test.
CURRENT RATES: automatically selected

50 mA/uSec	0 uH to	18 uH
5 mA/uSec	18 uH to	180 uH
.5 mA/uSec	180 uH to	1.8 mH
50 mA/mSec	1.8 mH to	18 mH
5 mA/mSec	18 mH to	180 mH
.5 mA/mSec	180 mH to	1.8 H
.05 mA/mSec	1.8 H to	19.99 H

ACCURACY: +/−2% +/− 1 digit
RESOLUTION AND RANGES: .10 uH to 20 H, fully autoranged

.01 uH	0.10 uH to	19.99 uH
.1 uH	20.0 uH to	199.9 uH
1 uH	200 uH to	999 uH
.001 mH	1.000 mH to	1.999 mH
.01 mH	2.00 mH to	19.99 mH
.1 mH	20.0 mH to	199.9 mH
1 mH	200 mH to	999 mH
.001 H	1.000 H to	1.999 H
.01 H	2.00 H to	19.99 H

RINGING TEST (U.S. Patent #3,990,002)

A dynamic test of inductor quality determined by applying an exciting pulse to the inductor and counting the number of cycles the inductor rings before reaching a preset damping point.
INDUCTOR RANGE: 10 uH and larger, non-iron core
ACCURACY: +/− 1 count on readings between 8 and 13 Rings
RESOLUTION: +/− 1 count
EXCITING PULSE: 5 volts peak; 60 Hz rate

GENERAL

TEMPERATURE: **operating range:** 32° to 104°F (0° to 40°C) **range for specified accuracy** (after 10 minute warmup): 50° to 86°F (10° to 30°C)
POWER: 105-130V AC, 60Hz, 24 watts with supplied PA251 power adapter. Battery operation with optional BY234 rechargeable battery. 210-230V AC operation with optional PA252 Power Adapter.
AUTO OFF: Removes power during battery operation if unit sits idle longer than 15-20 minutes.
BATTERY LIFE: 8 hours typical inductor testing; 7 hours typical capacitor testing.
SIZE: 6" x 9" x 11.5" (15.2cm x 22.9 x 29.1cm) HWD
WEIGHT: 6 lbs. (2.7kg) without battery, 7.6 lbs (3.4kg) with battery
GOOD/BAD INDICATION: Functions on all tests. Requires user input of component type and value, or input of desired limits.
IEEE: Requires the use of Sencore IB72 Bus Interface Accessory.
The following interface codes apply: SH1, AH1, T8, L4, SRO, RLO, PPO, DCO, DTC, CO. All readings are test accuracy +/− 1 count.

Specifications subject to change without notice

ACCESSORIES

SUPPLIED:
39G219 Test Leads
39G144 Test Lead Adapter
39G201 Test Button Hold Down Rod
64G37 Test Lead Mounting Clip
PA251 AC Power Adapter/Recharger

OPTIONAL:
39G85 Touch Test Probe
FC22l Field Calibrator
BY234 Rechargeable Lead Acid Battery
SCR250 SCR/Triac Test Accessory
CC254 Carrying Case
CH255 Component Holder
CH256 Chip Component Test Lead
IB72 Bus Interface Accessory
PA252 220V AC Power Adapter/Recharger

Controls

1. COMPONENT TYPE select buttons. Use with TEST buttons (4), and COMPONENT PARAMETERS buttons (6) for component limit testing.

- **a. - e.** capacitor type buttons - Use with other beige color coded capacitor buttons (4a - d) and (6m - o).
- **f. SPARE** - Provides a spare button to allow for future component types and internal memory updates.
- **g. - i.** Inductor type buttons - Use with other blue color coded inductor buttons (4e - f) and (6s - u).

2. LCD DISPLAY

- **2a. SHORT** - Indicates that test leads , or component connected to test leads, are shorted when LEAD ZERO OPEN button (9a) or CAPACITOR VALUE TEST button (4a) is pushed.
- **2b. OPEN** - Indicates that test leads, or component connected to test leads, are open when LEAD ZERO SHORT button (9b) or INDUCTOR VALUE TEST button (4e) is pushed.
- **2c. WAIT** - Indicates internal circuits are discharging after CAPACITOR LEAKAGE TEST button (4c) is released. Also indicates external voltage on test leads. All tests are locked out while WAIT indicator is on.
- **2d. DIGITAL READOUT** - Indicates value of test result. Last two digits are place holders and indicate 0 on large readings. Displays error message if error condition exists.
- **2e. READING ANNUNCIATORS** - Automatically light to qualify the reading displayed in the DIGITAL READOUT (2d).
- **2f. GOOD** - Indicates that component meets pre-defined tolerances for the test selected by TEST button (4).
- **2g. BAD** - Indicates that the component does not meet the pre-defined tolerances for the test selected by TEST button (4).

3. APPLIED VOLTAGE LCD DISPLAY - Displays the amount of leakage voltage to be applied to the TEST LEAD (10) when the CAPACITOR LEAKAGE button (4b) is pressed. Voltage is selected using COMPONENT PARAMETERS keypad (6a-l & 6r).

4. TEST buttons

- **a. CAPACITOR VALUE** - Depress to test capacitor value.
- **b. DIELECTRIC ABSORP** - Depress to read percentage of dielectric absorption.
- **c. CAPACITOR LEAKAGE** - Depress to test capacitor leakage after the capacitor working voltage is entered with the COMPONENT PARAMETERS keypad (6).
- **d. CAPACITOR ESR** - Depress to test capacitor ESR.
- **e. INDUCTOR VALUE** - Depress to test inductor value.
- **f. INDUCTOR RINGER** - Depress for ringing (quality) test on coils, yokes/flybacks and switching transformers after selecting inductor type with COMPONENT TYPE switches (1g-i).

5A. CAUTION INDICATOR LED - Blinks as a warning when leakage voltage is set to 25 volts or higher, as indicated on APPLIED VOLTAGE LCD DISPLAY (3). Voltage is only present at test leads when CAPACITOR LEAKAGE test button (4c) is depressed.

5B. PROTECTION CIRCUIT OR FUSE OPEN ALARM - A flashing LED along with an audible alarm will activate when either the test lead input fuse opens or the protection circuit senses 10 volts or greater.

6. COMPONENT PARAMETERS keypad - Use to enter parameters for limit testing..

- **a-k. NUMERIC INPUT** - Use to enter numerical value portion of parameters. Use with COMPONENT PARAMETERS buttons (m-u).
- **l. CLR** - Push once to clear NUMERIC INPUT entry. Push twice to clear all parameters and COMPONENT TYPE switches (1).
- **m-o. CAPACITOR VALUE MULTIPLIER** - Use after NUMERIC INPUT entry (6a-k) to enter capacitor value. Push to recall entered value.
- **p-q. PERCENTAGE buttons** - Use after NUMERIC INPUT entry (6a-k) to enter component tolerance. Push to recall entered value.
- **r. VOLTS** - Use with NUMERIC INPUT (6a-k) to select desired test voltage for capacitor leakage tests.
- **s-u. INDUCTOR VALUE MULTIPLIER** - Use after NUMERIC INPUT entry (6a-k) to enter inductor value. Push to recall entered value.

7. PULL CHART - Provides simplified operating instructions and quick reference tables.

8. LEAKAGE Switch

- **a. CURRENT** - Selects readout of leakage current in uA or mA when CAPACITOR LEAKAGE button (4c) is depressed.
- **b. OHMS** - Selects readout of leakage in ohms when CAPACITOR LEAKAGE button (4c) is depressed.

9. LEAD ZERO Switch

- **a. OPEN** - Use with CAPACITOR VALUE button (4a) and open test leads to balance out test lead capacitance.
- **b. SHORT** - Use with INDUCTOR VALUE button (4e) and shorted test leads to balance out test lead inductance.

10. TEST LEAD INPUT JACK - Provides a connection for attaching supplied test leads (17) or optional CHIP COMPONENT TEST LEADS (30). Unscrew jack for access to protection fuse.

11. POWER Switch

- **a. OFF** - Removes power from all circuits.
- **b. AUTO OFF** - Provides power for approximately 15 minutes after auto off circuitry is reset. Auto off is bypassed when LC102 is powered from the AC Power Adapter.
- **c. ON & BATT TEST** - Turn unit on and reset auto off circuitry. Remaining battery life is displayed in LCD DISPLAY (2d).

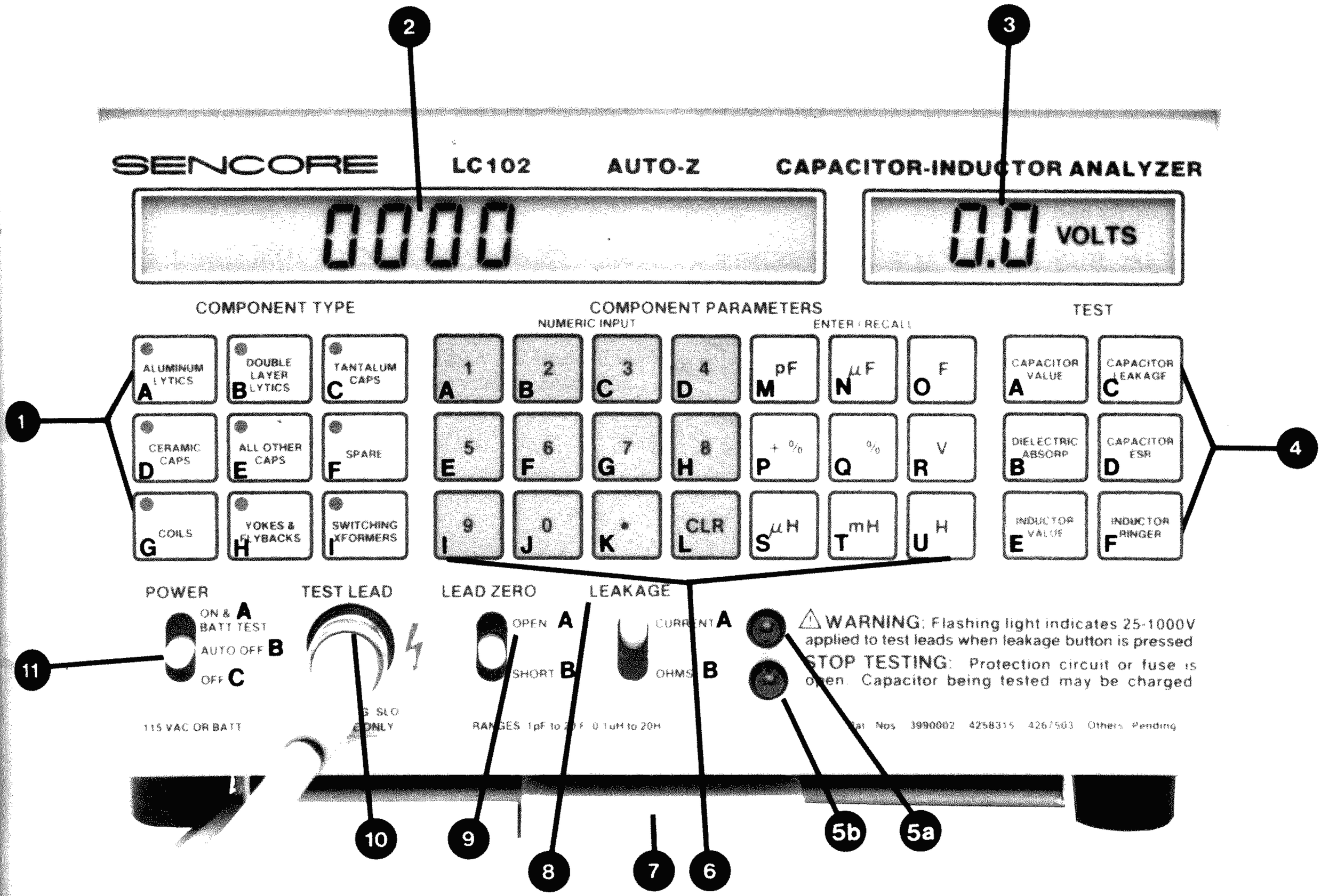

Fig. 1 — Location of front panel controls and features.

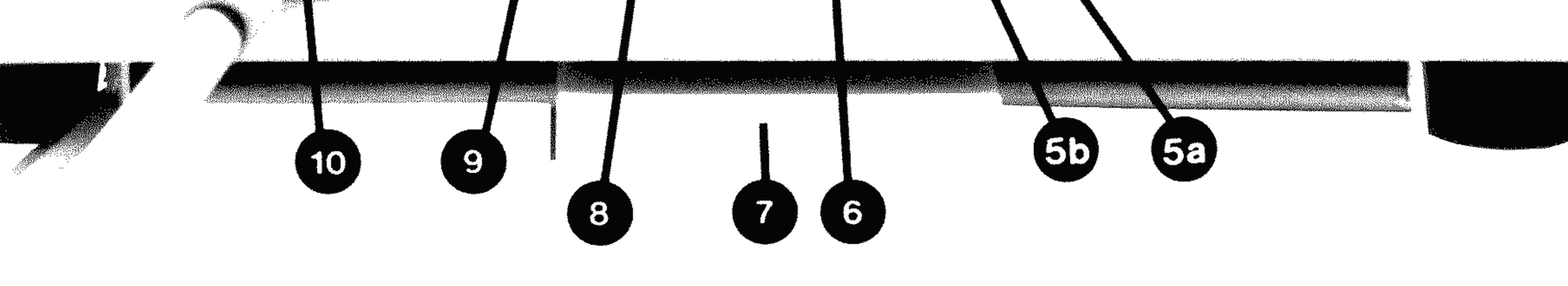

Fig. 2 — LCD annunciators.

Optional Accessories

22. 39G85 TOUCH TEST PROBE - Use for in-circuit testing of coils and inductors from P.C. board.

23. FIELD CALIBRATOR (FC221) - Use to periodically check calibration of the LC102.

24. RECHARGEABLE BATTERY (BY234) - Provides portable operation for the LC102. One battery required.

25. SCR/TRIAC TEST ACCESSORY (SCR250) - Use for testing SCRs and Triacs.

26. IEEE 488 BUS INTERFACE ACCESSORY - Connects between the INTERFACE ACCESSORY JACK (13) and the IEEE 488 port of a Bus controller to allow the LC77 to be used in automated test setups.

27. CARRYING CASE (CC254)- Provides protection and easy carrying for the LC102 and its accessories.

28. COMPONENT HOLDER (CH255)-Use to hold components for fast tests when doing volume testing.

29. CHIP COMPONENT TEST LEAD (CC256)- Special shielded test leads for testing small surface mount (Chip) components.

E-Z Hook® is a registered trademark of Tele Tek Inc.

Fig. 5 — Optional Accessories.

Supplied Accessories

17. TEST LEADS (39G219) - Special low capacity cable with E-Z Hook® clips. Connect to TEST LEAD INPUT (10).

18. 39G144 TEST LEAD ADAPTER (39G144) - Use to adapt TEST LEADS (17) to large, screw terminal capacitors.

19. TEST BUTTON HOLD DOWN ROD (39G201) - Use to hold CAPACITOR LEAKAGE button (4a) depressed when reforming capacitors.

20. TEST LEAD MOUNTING CLIP (64G37) - Use to hold Test Lead when not in use.

21. POWER ADAPTER (PA251) - Plugs into POWER INPUT (16) to power unit from 105-130 VAC line. Also recharges the (optional) BY234 Battery when installed inside the LC102.

Fig. 4 — Supplied Accessories.

OPERATION

Introduction

Before you begin to use your LC102 AUTO-Z, take a few minutes to read through the Operations and Applications sections of this manual and acquaint yourself with the features and capabilities of your instrument. After you have familiarized yourself with the general operation of the LC102, most tests can be performed with the information on the front panel.

AC Power Operation

For continuous bench operation the LC102 is powered from any standard 105-130V (50-60 Hz) AC line using the PA251 Power Adapter. When 220V AC operation is required, power the LC102 with the optional PA252 220 VAC Power Adapter. Connect the Power Adapter to the POWER IN JACK located on the rear of the LC102, as shown in Figure 6.

The power adapter serves as a battery charger to recharge the (optional) BY234 battery when it is installed in the unit. The BY234 may be left installed in the LC102 at all times without danger of over charging. Connecting the Power Adapter bypasses the auto-off circuitry in the LC102 and allows continuous, uninterrupted operation.

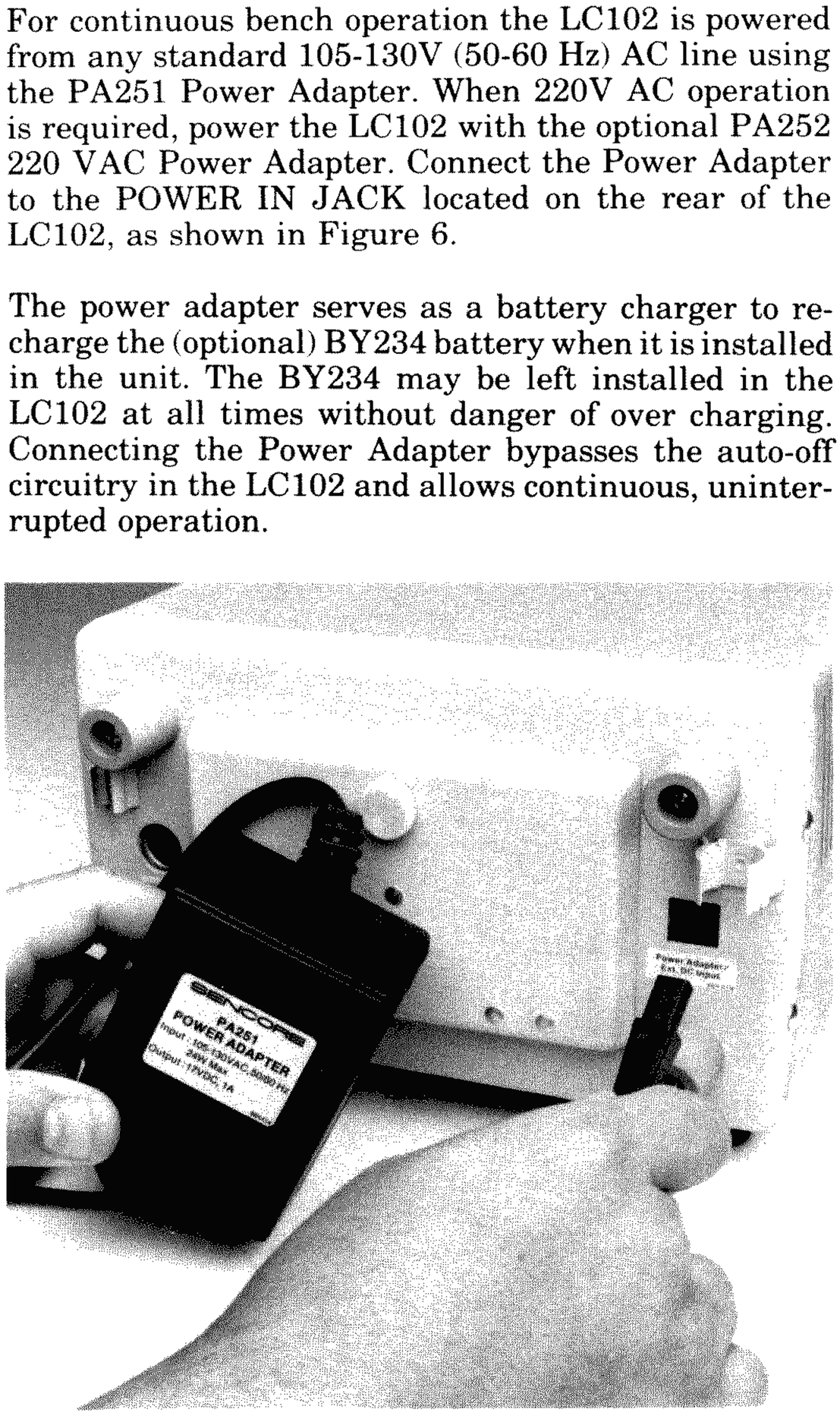

Fig. 6 — Connect the PA251 to the 12 V DC input for AC bench operation and to recharge the optional battery.

WARNING

Using an AC adapter other than the PA251 or PA252 may cause damage to the LC102, may cause the optional battery (if installed) to improperly charge, or may cause measurement errors on low value of components. Only use a Sencore PA251 or PA252 Power Adapter for AC operation.

To operate the LC102 from an AC line:

1. Connect the AC line cord of the power adapter to an adequate source of AC power.

2. Connect the power adapter lead to the POWER INPUT JACK on the back of the LC102, as shown in figure 6.

3. Push the POWER switch on the LC102 up to the ON & BATT TEST position and release. The WARNING LED will momentarily blink to indicate it is operational and the displays will reset and read zeros.

4. The LC102 is immediately ready for use. If precise measurements are required, allow the unit to operate for 10 minutes to reach specified accuracy.

WARNING

The CAUTION INDICATOR LED must momentarily flash when the POWER switch is first turned on and moved from the OFF to the ON & BATT TEST position. Failure of the light to flash indicates a problem with the LED or safety circuits. DO NOT operate the LC102 in this condition, since it exposes the operator to dangerous voltages without adequate warning.

Battery Operation

The LC102 is designed to operate as a completely portable unit with the optional BY234 rechargeable battery installed. The operation of the LC102 when it is battery powered is the same as when it is AC powered. The length of time the AUTO-Z will operate before the battery needs recharging depends on several factors: 1. the test functions used; 2. temperature; 3. battery age.

Leakage tests place the heaviest current drain on the battery -- greater currents result in shorter battery life between charging. Value tests place the least drain on the battery. For typical operation, the LC102 provides approximately 7 hours of complete capacitor testing (value, ESR, D/A and leakage), and 8 hours of complete

inductor testing (value and ringing). These times, of course, will vary with temperature and battery age.

As the temperature of the battery decreases, its capacity also decreases. The operating time between rechargings decreases at the rate of approximately 1 hour for every 20 degrees F drop in temperature below 70°F. The BY234 battery is a sealed, lead-acid type which requires no maintenance other than recharging. As a battery ages, it will require more frequent rechargings. If used properly, the BY234 will provide several years of service before needing replacement.

You can maximize the lifetime of the BY234 several ways: 1. Never allow the battery to deeply discharge. The LC102 has a built-in battery test and low battery shut off circuitry. Check the remaining charge periodically and recharge the battery before the low battery circuit shuts the unit off. 2. Keep the battery fully charged. The BY234 will not be harmed if it is left installed in the LC102 during AC operation. Instead, this will keep the battery fresh and ready for use and will actually lengthen its useful lifetime. 3. Recharge the battery before using it if it has sat idle for more than a couple of weeks. Lead-acid batteries normally loose some of their charge if they sit idle for a period of time.

WARNING

Observe these precautions when using lead-acid batteries:

1. Do not dispose of old lead-acid batteries in fire. This may cause them to burst, spraying acid through the air.
2. Do not short the "+" and "−" terminals together. This will burn open internal connections, making the battery useless.
3. Do not charge 12 volt lead-acid batteries with a voltage greater than 13.8 VDC. High charging voltage may damage the battery or cause it to explode.
4. Do not drop the battery. While lead-acid batteries are well sealed, they may break if dropped or subjected to a strong mechanical shock. If the battery does break and the jelled electrolyte leaks out, neutralize the acid with baking soda and water.
5. Do not charge the battery below 0° C or above +40° C. (32° to 104° F).

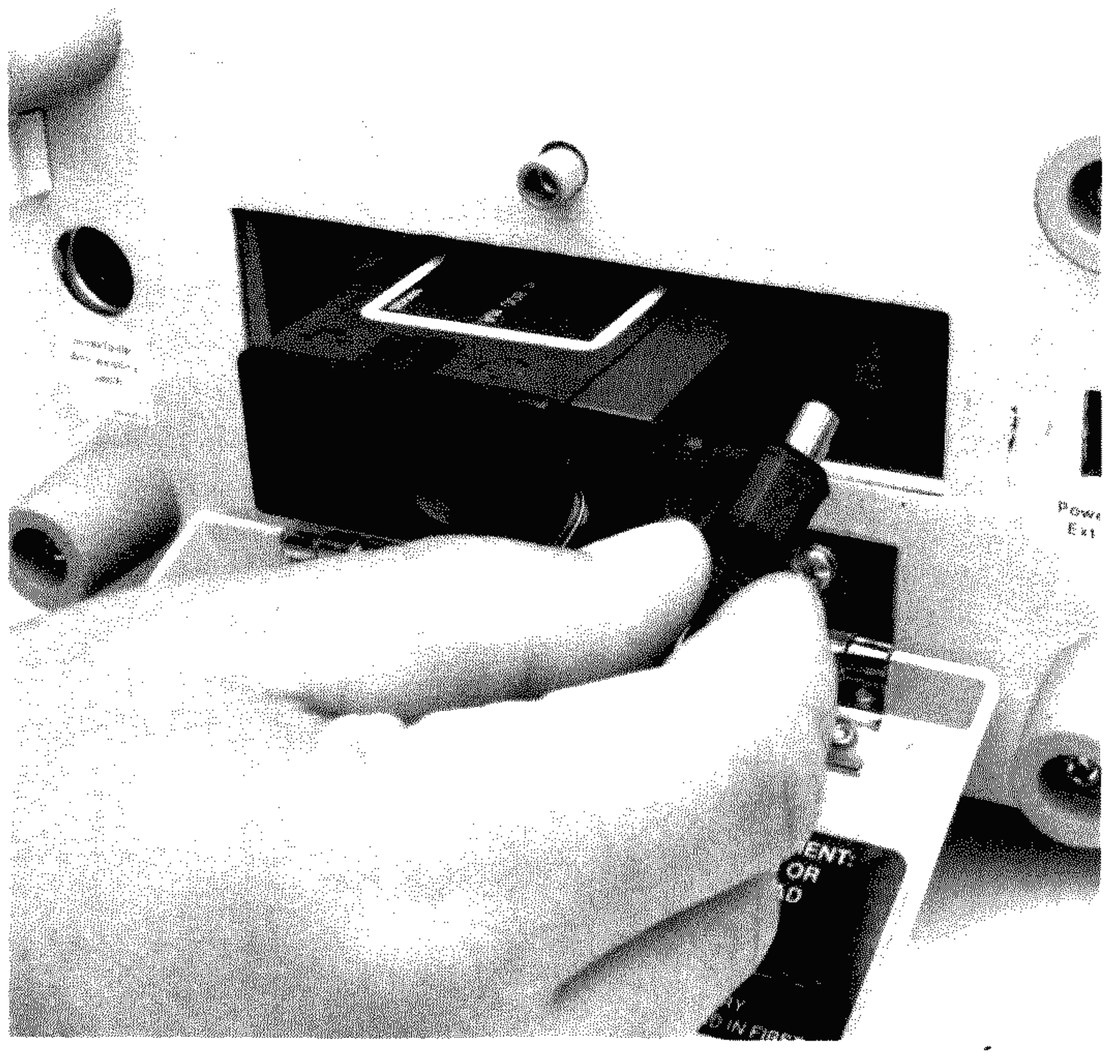

Fig. 7 - The optional BY234 is installed in the LC102 for portable operation.

To install the optional BY234 Battery:

1. Open the BATTERY COMPARTMENT COVER located on the rear of the unit by unscrewing the thumbscrew. Fold the cover down on its hinge.

2. Slide the battery end that does not have the connector attached into the battery compartment. (The wire should be facing out after the battery is in place.)

3. Connect the plug from the battery to the jack inside the battery compartment.

4. Close the battery compartment cover and tighten the thumbscrew to hold the door and battery in place.

Note: Recharge the BY234 overnight before using it for the first time.

Battery Test

The LC102 has a built-in battery test feature which shows the remaining battery charge. A reading of 100% indicates that the battery is fully charged. As the battery charge is used up, the reading will drop. The low battery circuits will turn the unit off shortly after the battery test reading drops to 0%, and before the battery level drops too low for reliable operation. The LC102 never fully discharges the battery which helps extend the life of the BY234.

To perform the battery test:

1. With a BY234 installed, move the POWER switch to the ON & BATT TEST position.

2. Read the percentage of remaining battery charge in the LCD DISPLAY.

3. If the reading shows 0%, the unit may not operate, or operate for just a short time since the low battery circuit turns the LC102 off at this battery level.

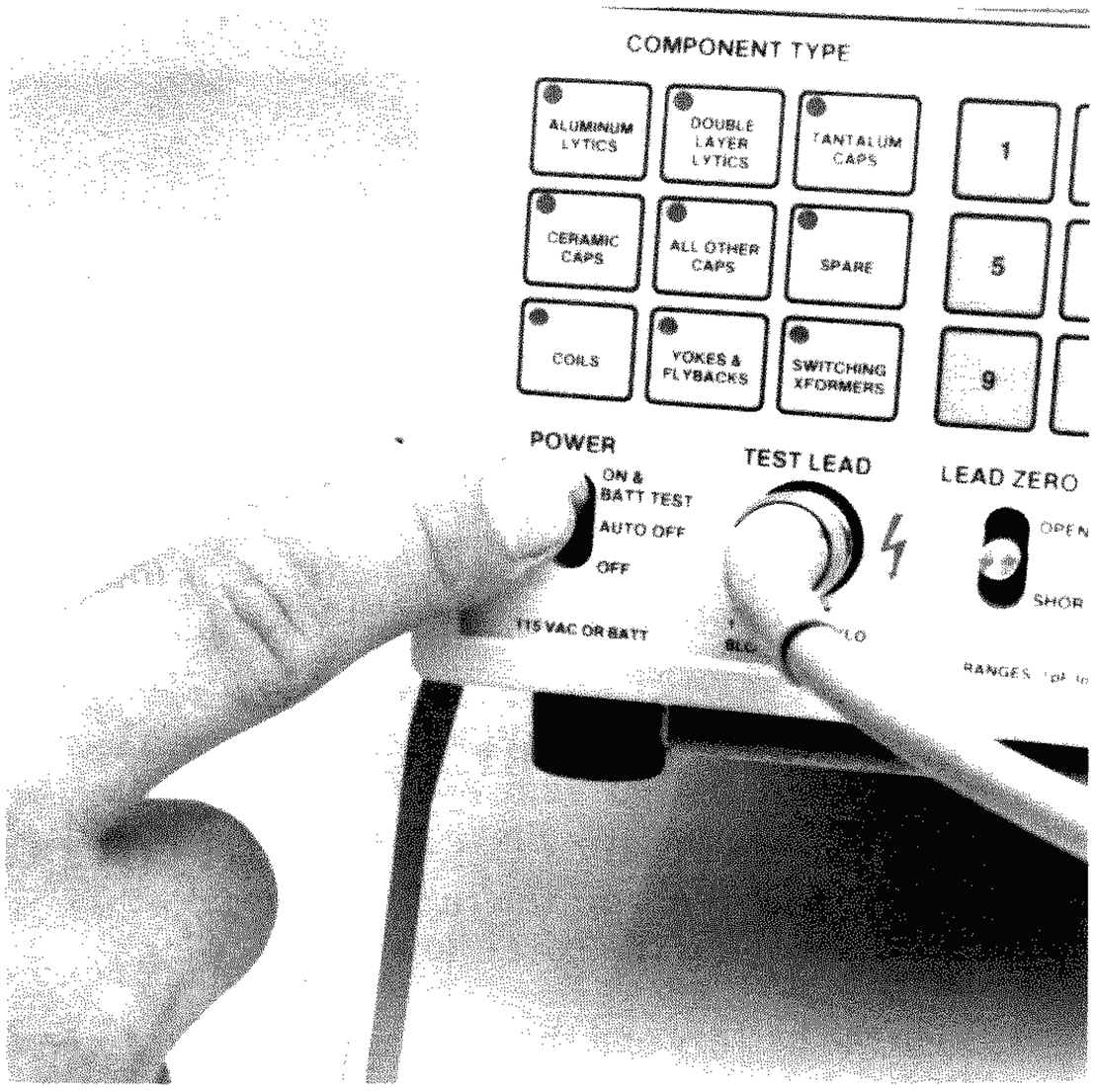

Fig. 8 — Push the Power switch to "On & Batt Test" to read the remaining battery charge.

Recharging the Battery

The BY234 battery should never be allowed to remain discharged for more than a few hours, since this will shorten its lifetime. The battery must be recharged whenever the battery test reads 0%. However, you should recharge the battery more often than this to lengthen the battery's lifetime and keep the LC102 ready for portable use at all times.

To recharge the battery, simply leave it installed inside the LC102 while the unit is connected to the AC Power Adapter and the Power Adapter is connected to a source of AC power. The charging time required to return the battery to 100% depends on how far it is discharged. The battery will trickle charge while the LC102 is in use and powered from the AC adapter, but it will recharge the quickest if the POWER switch is in the "OFF" position. Normally, a battery will completely recharge in about 8 hours with the POWER switch "OFF".

Auto Off

To conserve battery charge, the LC102 contains an auto off circuit. This circuit keeps the batteries from running down if you should forget to turn the unit off, but keeps the AUTO-Z powered up during use. The auto off circuit will shut the LC102 off after approximately 15 minutes if none of the front panel buttons have been pushed. Pushing any COMPONENT TYPE button, COMPONENT PARAMETERS button, TEST button, or momentarily moving the POWER button to the ON & BATT TEST position will reset the auto off circuits. The auto off circuits are bypassed when the LC102 is operated from the AC Power Adapter.

To operate the LC102 using the optional BY234 battery:

1. Install the BY234 battery into the LC102 battery compartment.

NOTE: If you are using the BY234 for the first time, be sure to charge the battery before using the LC102. Though factory tested, the BY234 may not be charged when you receive it.

2. Push the POWER switch to the ON & BATT TEST position and release. The WARNING LED will momentarily blink to indicate it is operational and the displays will reset and read zeros.

4. The LC102 is immediately ready for use. If precise measurements are required, allow the unit to operate for 10 minutes to reach specified accuracy.

WARNING

The CAUTION INDICATOR LED must momentarily flash when the POWER switch is moved from the OFF to the ON & BATT TEST position. Failure of the light to flash indicates a problem with the LED or safety circuits. DO NOT operate the LC102 in this condition, since it exposes the operator to dangerous voltages without adequate warning.

STOP TESTING Indication

The LC102 is designed to provide you with the safest possible method of testing capacitors and inductors. The STOP TESTING indicators of the LC102 are a flashing LED indicator on the front panel and an internal audible alarm. This important feature alerts you when a shock potential exists due to either the test lead fuse having blown, preventing the capacitor from discharging, or that you have connected to a charged circuit (10V or more).

You should, at this time, familiarize yourself with this feature by removing the test lead fuse. Refer to the maintenance section, located at the back of this manual for information on replacing the test lead fuse (page 59).

If the STOP TESTING indicators activate:

1. Stop all testing with the LC102.

2. Carefully discharge the capacitor you are testing by connecting a 10k ohm 1 watt resistor across the terminals.

3. Replace the test lead fuse if blown, or remove the voltage from the point the test leads are connected to.

4. Resume testing.

Test Leads

The test leads supplied with the LC102 (39G219) are made of special, low capacity coaxial cable. Using any other cable will add extra capacity to the meter circuits, which may not be within the range of the lead zeroing circuits. Attempting to zero the leads with another, higher capacitance cable connected will cause the LCD DISPLAY to show the message error. This indicates that the value is beyond the zeroing limits of the LC102.

If the test leads ever require replacement, new leads (part #39G219) may be ordered directly from the: SENCORE SERVICE DEPARTMENT at 3200 Sencore Drive, Sioux Falls, SD 57107.

Test Lead Mounting Clip

A TEST LEAD MOUNTING CLIP (64G37) is supplied with the LC102. This clip is useful to hold the test leads out of the way when not in use, but keeps them ready and within reach at any time. The mounting clip may be attached on the top of the LC102, on the side of the handle, or wherever it is most convenient. To mount the clip, peel off the backing, place the clip in the desired location and press it firmly in place.

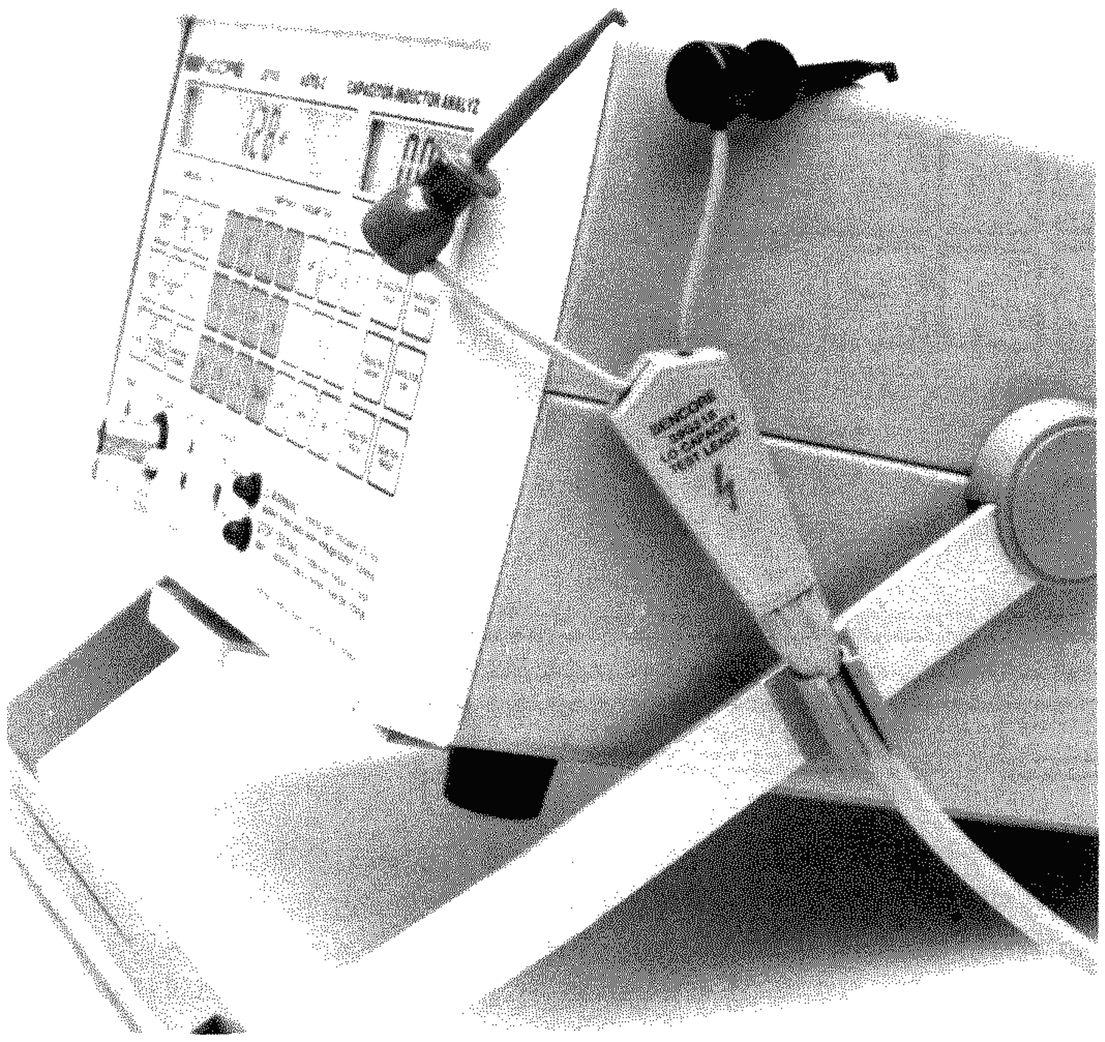

Fig. 9 — The test lead mounting clip holds the test leads out of the way, yet ready for use at anytime.

NOTE: Do not mount the TEST LEAD MOUNTING CLIP to the sides of the AUTO-Z. as this will interfere with the handle movement.

Test Lead Adapter

Some larger value electrolytic capacitors have screw terminals rather than the conventional wire leads or solder terminals. To connect the LC102 to these capacitors you will need to use the supplied 39G144 TEST LEAD ADAPTER. The TEST LEAD ADAPTER converts the E-Z Hook ® clips of the test leads to alligator clips which will clamp onto the large screw terminals. A mounting clip on the back of the LC102 stores the TEST LEAD ADAPTER when it is not in use.

Fig. 10 - The 39G144 Test Lead Adapter allows large, screw-terminal capacitors to be connected to the LC102.

To use the TEST LEAD ADAPTER:

1. Connect the red E-Z Hook® of the LC102 test lead to the red TEST LEAD ADAPTER terminal.

2. Connect the black E-Z Hook® to the black adapter terminal.

3. Connect the red TEST LEAD ADAPTER lead to the "+" capacitor terminal, and the black lead to the "−" terminal.

4. Test the capacitor in the usual manner.

Test Lead Fuse

A 1 amp, Slo Blo (3AG) fuse is located in the TEST LEAD input jack on the front of the AUTO-Z. This fuse protects the unit from accidental external voltage or current overloads.

Lead Zeroing

The test leads connected to the LC102 have a certain amount of capacitance, resistance, and inductance which must be balanced out before measuring small value capacitors and inductors or before measuring capacitor ESR. The test lead impedence should be zeroed when the LC102 is first turned on. It will remain zeroed as long as the unit is powered on. If the LC102 is battery operated and is turned off by the Auto Off circuits, however, the leads must be rezeroed.

To zero the test leads:

1. Turn the LC102 on by momentarily pushing the POWER switch to the ON & BATT TEST position.

2. Connect the test leads to the TEST LEAD INPUT jack on the front of the AUTO-Z.

3. Place the open test leads (with nothing connected) on the work area with the red and black test clips next to each other, but not touching.

4. Move the LEAD ZERO switch to the "OPEN" position. Release when a "–" begins to move through the display.

5. Connect the red and black test clips together.

6. Move the LEAD ZERO switch to the "SHORT" position, and release when a "–" begins to move through the display.

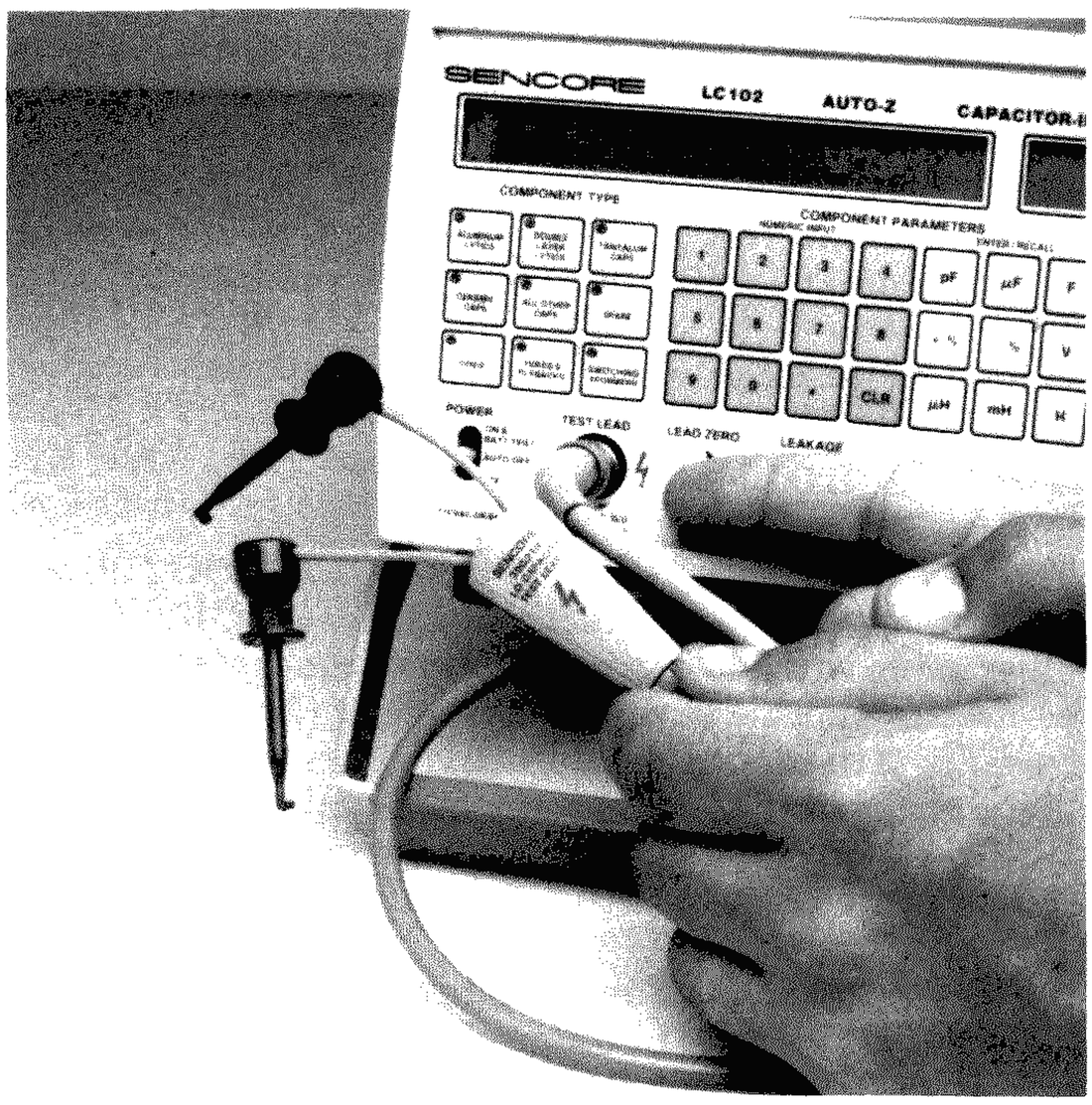

Fig. 11 — The impedence of the test leads is balanced out with the LEAD ZERO button.

Entering Component Data

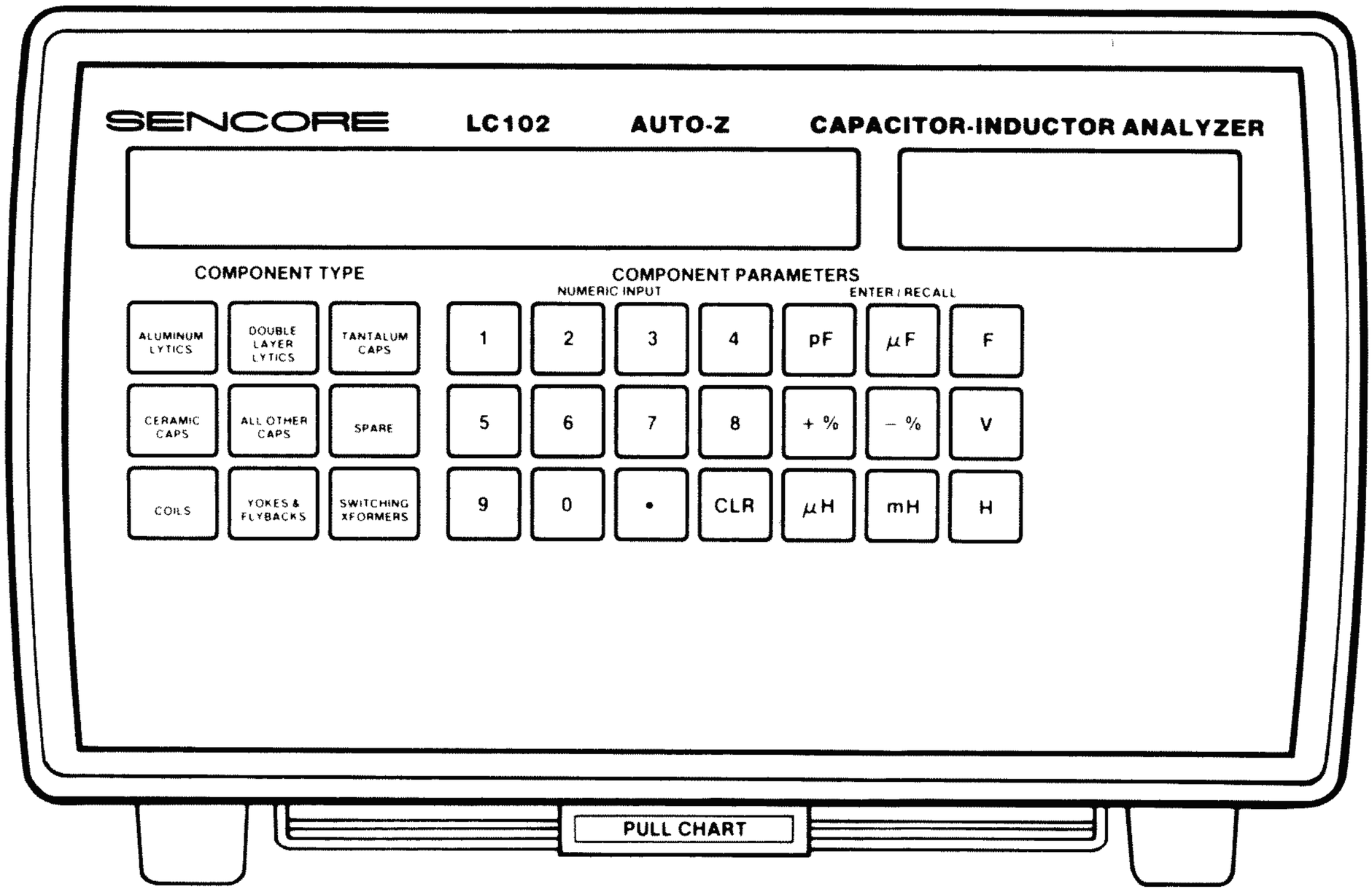

Fig. 12 — Controls used for entering component data.

To use the LC102 to perform the automatic GOOD/BAD tests explained on page 26, you must enter data about the component under test into the LC102 AUTO-Z. (All component tests can be performed without entering component data if automatic GOOD/BAD test indications are not desired). The component data tells the LC102 the "ideal" parameters necessary to make the GOOD/BAD determination.

The component data which can be entered into the LC102 includes: component type, value, tolerance and rated working voltage for capacitors, and component type, value, and tolerance for inductors and coils. These parameters are usually marked on the component, or can be determined by looking the component up in a parts list or replacement guide. The APPLICATIONS section of this manual contains information on how to identify capacitor and inductor types.

NOTE: All component data can be cleared by pushing the "CLR" button on the gray COMPONENT PARAMETERS keypad twice.

To Enter Component Type:

NOTE: The COMPONENT TYPE switches tell the LC102 what kind of component is being tested.

1. Press the desired COMPONENT TYPE button. Use the beige color coded buttons when checking capacitors and the blue buttons when checking inductors.

2. A red LED indicator in the corner of the COMPONENT TYPE button lights when that button is selected.

To Enter Component Value:

1. Enter a number, up to 3 significant digits, equal to the value of the capacitor or inductor. (Example: "123". or "123000."). Each digit will appear in the display as a key is pushed.

a. The LC102 rounds the entry down if you enter a number having more than 3 significant digits (Example: "1239" becomes "1230").
b. The LC102 accepts numbers up to 6 places before the decimal. (Example: "100000"). Entries larger than this reset to 0.
c. The LC102 accepts numbers up to 5 places after the decimal for numbers less than 1. (Example: "0.00001"). Entries smaller than this result in "Error 2".
d. All unnecessary place holder digits are dropped. (Example: ".06700" becomes ".067").
e. Push the "CLR" button once to clear the value entry and start over.

2. Enter the desired capacitor value multiplier or inductor value multiplier.

a. The capacitor value range is 1 pF to 19.9 F. The inductor value range is .1 uH to 19.9 H. Entering values beyond this range causes an "Error 2".
b. The LC102 accepts non-conventional value notations, such as ".00001 F", ".00002 uF" or "100000 pF"

3. After entering the multiplier, the display momentarily shows the entered value and multiplier before returning to a "0000" reading. The LC102 is now ready for the next parameter entry.

4. To check the entered capacitor value at any time, push any beige colored capacitor value multiplier button. To check the entered inductor value push any blue colored inductor value multiplier button.

5. To change an entered value parameter, repeat steps 1 & 2.

To Enter Component Tolerance:

1. Enter a 1, or 2 or 3 digit number up to 100 which equals to the "+" value tolerance of the capacitor or inductor. Do not use a decimal.

2. Press the white "+%" COMPONENT PARAMETERS button.

3. Enter a 1 or 2 digit number up to 99 which equals to the "−" value tolerance of the capacitor or inductor. Do not use a decimal.

4. Press the white "−%" COMPONENT PARAMETERS button.

5. To check the entered percentage, press the white "+%" or "−%" button at any time.

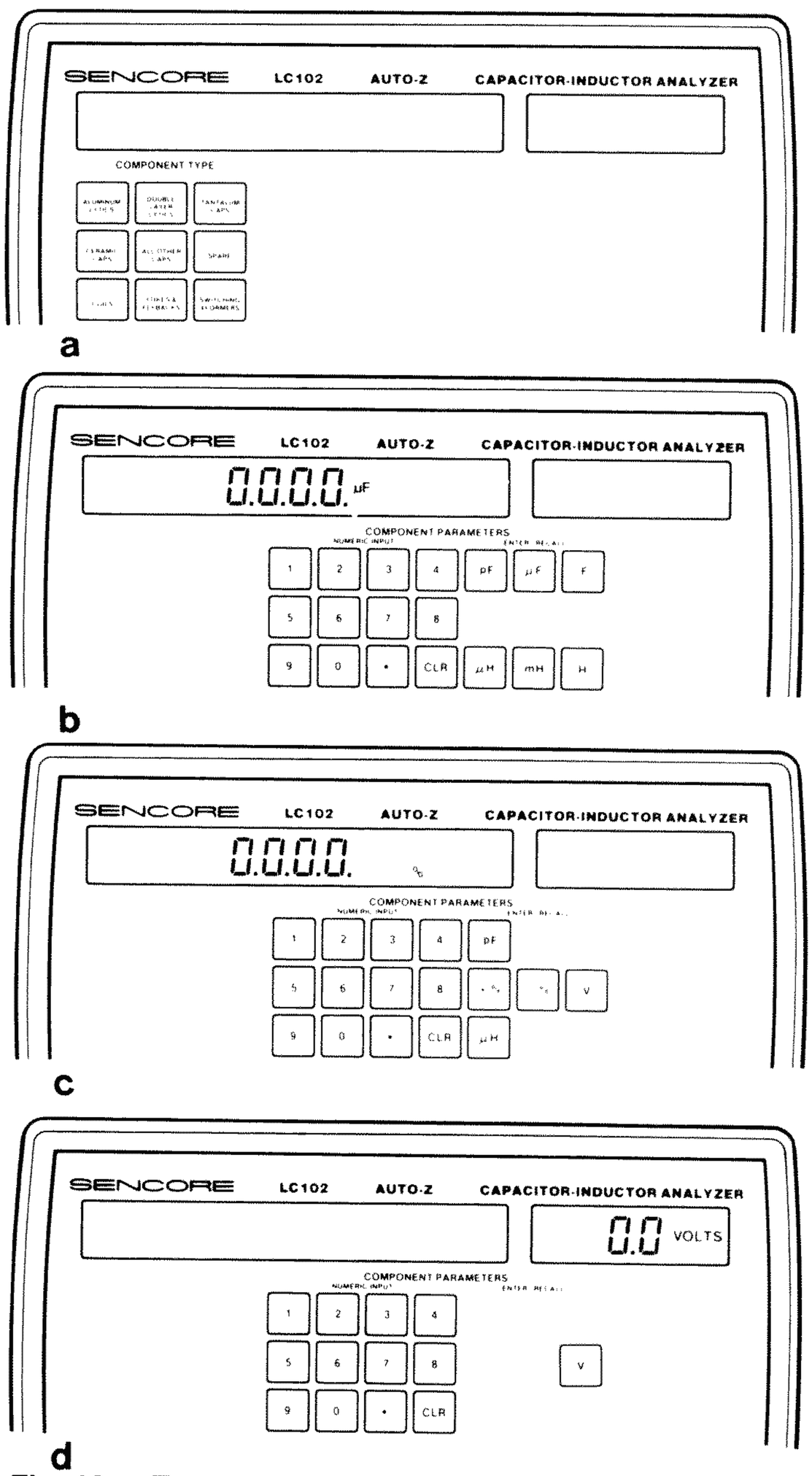

Fig. 13 — To enter component data select the COMPONENT TYPE switch which corresponds to the component being tested (a). Next, enter the component value (b) and value tolerance (c). Finally, if testing a capacitor, enter the rated working voltage (d).

To Enter Leakage Voltage:

1. Enter the desired voltage from 1 to 999.9 using the gray keys on the NUMERIC INPUT keypad. A decimal, followed by one digit may be entered, but is not necessary.

2. Push the white "V" key to enter the voltage. The voltage will appear in the applied voltage LCD display. For values greater than 25 volts the red WARNING indicator LED will blink.

NOTE: The voltage is applied to the component Test Leads when the CAPACITOR LEAKAGE test button is pushed.

3. To enter a different voltage, repeat steps 1 & 2.

Error Codes

Several error conditions may occur while using the LC102 which cause an error message to appear in the LCD display. These are usually caused by small errors in the operation of the LC102, although severely defective components may also cause certain error conditions. The error conditions are explained below.

Error 1 - Component Type Selection Error - This error occurs when a component test is attempted, and either an incorrect COMPONENT TYPE switch is selected for the test, or no COMPONENT TYPE switch is selected when required.

Possible causes:

1. Performing a capacitor test with an inductor COMPONENT TYPE switch selected.
2. Performing an inductor test with a capacitor COMPONENT TYPE switch selected.
3. Performing the INDUCTOR RINGER test without an inductor COMPONENT TYPE switch selected.
4. Performing any component test with the "Spare" capacitor COMPONENT TYPE button selected.

Error 2 - Entered Value Beyond Range of Unit - The component parameter entered via the keypad or IEEE is beyond the measuring range of the LC102.

Possible causes:

1. Entering a capacitance value greater than 19.9 Farads, or less than 1 picofarad.
2. Entering an inductance value greater than 19.9 Henrys, or less than .1 microhenrys.
3. Entering a leakage voltage greater than 999.9 volts.
4. Entering a tolerance percentage greater than +100%, or less than −99%.
5. Entering a tolerance percentage that includes a decimal.

NOTE: Entering a leakage voltage less than 1 volt will set the leakage supply to 0 volts.

Error 3 - Entered Value Beyond Range Of Test - The component parameter entered via the keypad or IEEE is beyond the limits of the automatic GOOD/BAD test. The component may still be able to be tested, but not for a GOOD/BAD indication.

Possible causes:

1. Performing an ESR test with a capacitor value of less than 1 uF entered.
2. Performing a D/A test with a capacitor value of less than .01 uF entered.
3. Performing a INDUCTOR RINGER test with a inductor value of less than 10 uH entered.

Error 4 - Value Beyond Zeroing Limit - The amount of inductance or capacitance at the TEST LEAD INPUT is beyond the range of the zeroing circuits. An open (greater than 20 kohms) or shorted (less than 1 ohm) test lead will cause the "OPEN" or "SHORT" annunciator to come on, rather than produce an "Error 4".

Possible causes:

1. The capacitance at the TEST LEAD Input is greater than 1800 pF.
2. The inductance at the TEST LEAD Input is greater than 18 uH.
3. The resistance at the TEST LEAD Input is greater than 1 ohm.

Error 5 - No Voltage Entered - This error occurs when the CAPACITOR LEAKAGE button is pushed and no test voltage has been entered.

Error 6 - Invalid Computer Interface Command - An improper command was sent to the LC102 via the computer interface.

Possible causes:

1. Sending a command that is not recognized by the LC102.
2. Wrong command syntax.

NOTE: Refer to the COMPUTER INTERFACE section of this manual for information on using the AUTO-Z with computer control.

Error 7 - Component Out Of Test Range - The component under test exceeds the limits of the test which was attempted.

Possible causes:

1. Measuring ESR of a capacitor having a value less than 1 uF.
2. Measuring capacitance value on an extremely leaky capacitor.
3. Attempting a capacitor value test with 1 ohm to 2 Megohms of resistance connected across test leads.

Capacitor Testing

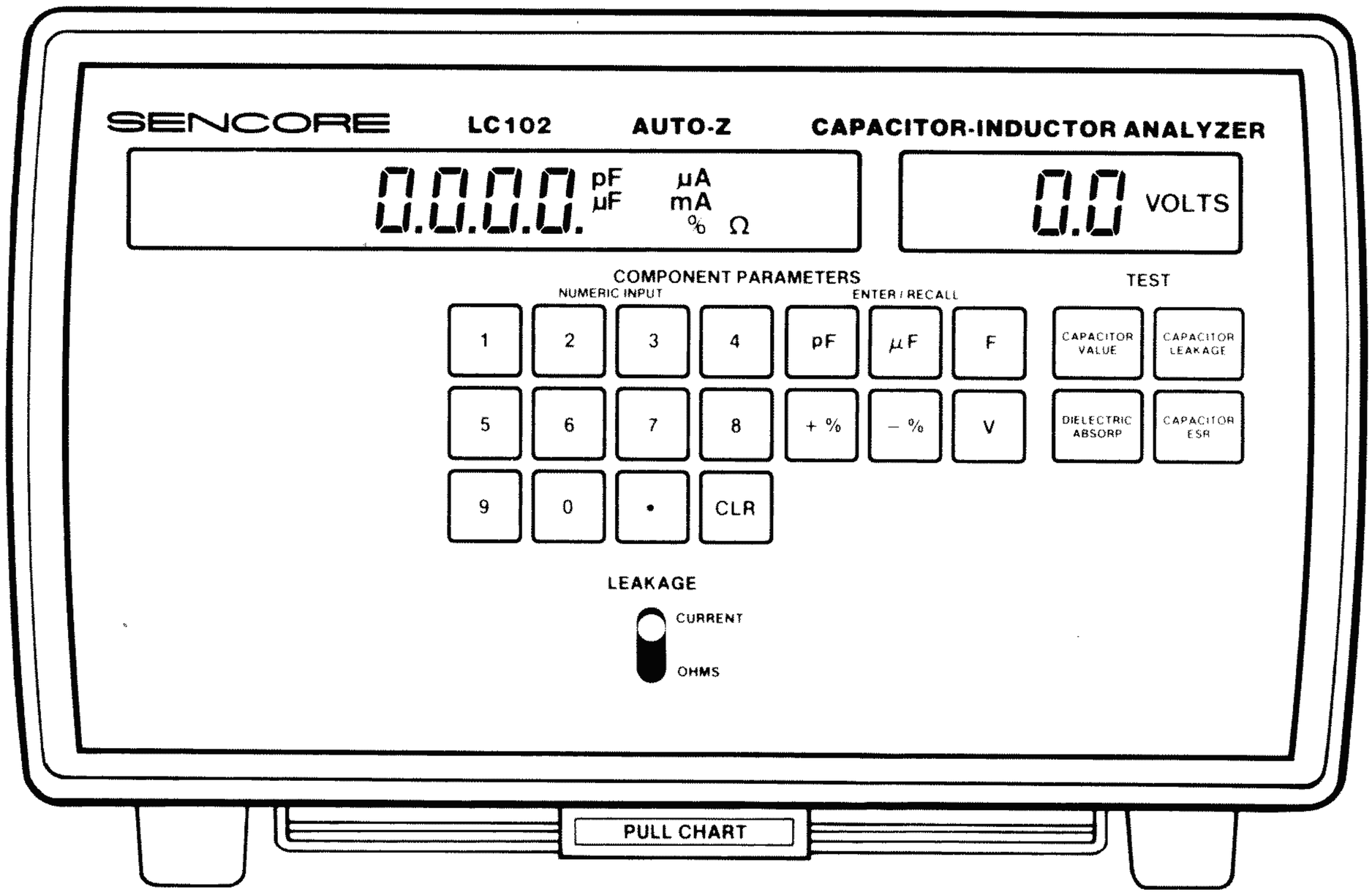

Fig. 14 — Controls used for capacitor parameter tests.

The LC102 AUTO-Z checks capacitors for value from 1.0 pF to 20 Farads in 12 automatically selected ranges. The automatic features of the LC102 AUTO-Z allow you to perform two levels of automated capacitor testing: basic parameter testing, and automatic GOOD/BAD testing. For basic parameter testing, you simply connect the component to the test leads and push the test button. The LC102 measures the capacitor and displays the test result. You must look up the values of leakage, ESR and dielectric absorption in a table to determine if the capacitor is good or bad.

For automatic GOOD/BAD testing, you first enter the parameters of the capacitor before performing the test. Then the LC102 will display the test results along with a GOOD/BAD indication of the capacitor. Only selected parameters need to be entered into the LC102, depending upon which tests you desire a GOOD/BAD readout for.

Capacitance Measurement Accuracy

The LC102 measures the RC charge time as the capacitor is charged through a precision resistor. This gives the most accurate measurement of true capacity available. Capacity values measured with the AUTO-Z may or may not exactly match readings on other instruments which use a different measuring technique. Bridges, for example, measure capacitive reactance using an AC signal. Capacitive reactance changes with frequency. Therefore, two bridges operating at different frequencies will give different capacity readings.

Electrolytic capacitors may normally read up to 50% higher than their marked value when measured with the LC102. This is because electrolytics are marked according to their value as measured on an AC-type impedance bridge. The value of an electrolytic changes greatly with the measurement frequency. This should cause no problem in determining if an electrolytic capacitor is good or bad, since most electrolytic capacitors have up to 80% value tolerance. The capacitor should read close to its marked value, or within tolerance when checked with the LC102. In addition, electrolytics most commonly fail due to leakage, dielectric absorption, or ESR. When an electrolytic does change value, the value drops far below the marked value.

The LC102 AUTO-Z is designed to measure capacitors out of circuit. Impedances found in the circuit will upset the AUTO-Z readings. Capacitors can not be checked in circuit accurately or reliably with any test method. Capacitors in circuit, however, may be tested by unsoldering one lead from the circuit. When doing this, be sure to remove power from the circuit. If the unit is AC powered, unplug the AC line cord. Whenever possible, remove the capacitor completely from the circuit to test it.

WARNING

When checking capacitors, remove the capacitor from circuit if possible. Otherwise, make sure the power is removed from the circuit and the AC line cord to the unit containing the capacitor is unplugged. Always connect the capacitor to the LC102 test leads before depressing the CAPACITANCE VALUE test button, to prevent discharge into test circuitry.

Measuring Small Capacitance Values In Noisy Environments

The sensitive AUTO-Z measuring circuits may be affected by large, outside signals (such as the AC fields radiated by some lights and power transformers) when small capacitance values are being measured. Special circuits in the LC102 help minimize noise pickup and stablize the readings.

Measurements of small value capacitors in noisy environments may be further improved by grounding the LC102 case to earth ground. When possible, power the LC102 with the PA251 AC Power Adapter connected to a properly grounded AC outlet. The PA251 Power Adapter maintains the third wire ground shield and keeps the noise away from the measuring circuits inside the AUTO-Z.

Capacitor Parameter Testing

The LC102 checks capacitors for capacitance value, leakage, dielectric absorption and equivalent series resistance (ESR). These tests are made directly using the beige colored TEST buttons. Simply connect the component to the test leads, push the desired TEST button, and read the test result in the LCD display. You can determine if the component is good or bad by comparing the measured ESR and leakage values to the standard values listed in the tables in this manual and on the PULL CHART underneath the LC102.

NOTE: Except for the capacitor leakage test, no component parameters need to be entered to perform any capacitor parameter test. If any blue Inductor Component Type button is selected, error code "Error 1" will appear in the LCD readout when you attempt to make a capacitor test. Push the "CLR" key on the gray NUMERIC keypad twice to clear any parameters.

The following procedures provide all the necessary information required to perform the capacitor parameter tests. A more detailed description of each of the capacitor tests and failure modes can be found in the APPLICATIONS section of this manual.

Measuring Çapacitor Value

To Measure Capacitor Value:

1. Zero the test leads, as explained on page 16.

2. Connect the capacitor to the test leads. If the capacitor is polarized, be sure to connect the black test clip to the "−" terminal of the capacitor and the red test clip to the "+" capacitor terminal.

3. Depress the CAPACITOR VALUE button.
   + Hold
4. Read the value of the capacitor in the LCD display.

NOTE: The "SHORT" annunciator appearing in the LCD display when the CAPACITOR VALUE button is depressed indicates a resistance of 1 ohm or less at the test leads. Check the test leads. If they are not shorted, the capacitor is bad.

Some capacitors will cause the display to read "Error 7". These capacitors have too much leakage current to allow the LC102 to make a value check and should be considered bad.

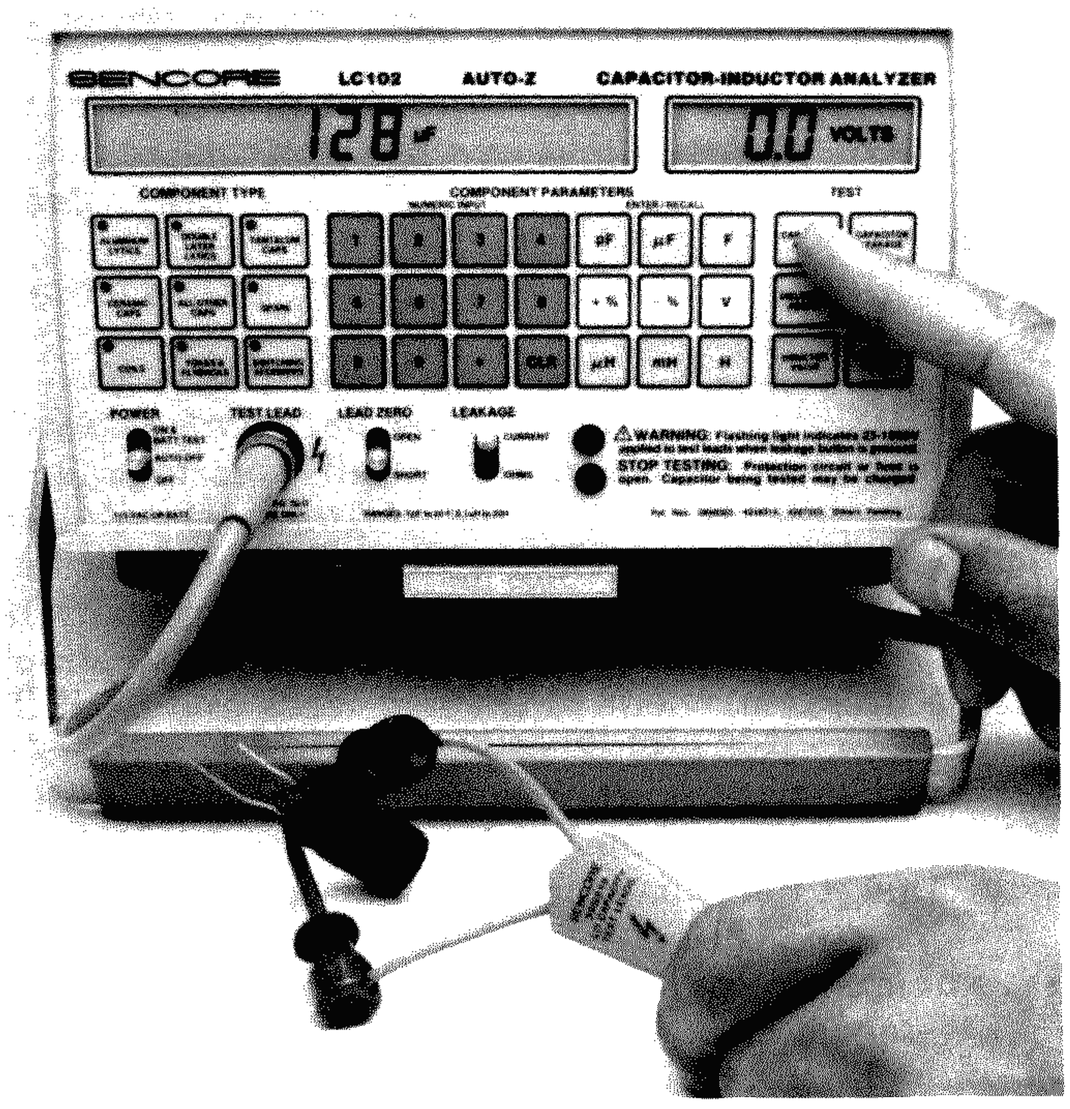

Fig. 15 — To measure capacitance, connect the capacitor to the test leads and push the CAPACITOR VALUE button. The amount of capacity appears in the LCD display.

Measuring Capacitor Dielectric Absorption

Dielectric Absorption is often called "battery action" or "capacitor memory" and is the inability of the capacitor to completely discharge. While all capacitors have some minute amounts of dielectric absorption, electrolytics may often develop excessive amounts which affect the operation of the circuit they are used in.

To check a capacitor for dielectric absorption, press the DIELECTRIC ABSORP button and compare the value to the chart. A fully automatic GOOD/BAD test may also be used to test for dielectric absorption. This test is explained on page 26.

To measure capacitor dielectric absorption:

1. Connect the capacitor to the test leads. If the capacitor is polarized, connect the red test clip to the "+" capacitor terminal and the black test clip to the "–" terminal.

2. Depress the DIELECTRIC ABSORP button. A "–" will appear and slowly move through the display indicating that the test is in progress.

3. Read the percentage of dielectric absorption on the display.

4. Compare the measured D/A to the amount listed in Table 1 for the capacitor type you are testing to determine if the capacitor is good or bad.

NOTE: Depending on the capacitor's value, type and actual D/A, the LC102 may, in a few cases, take up to 10 seconds to display a reading.

Maximum Allowable Percent Of D/A

Capacitor type	Maximum % of D/A
Double Layer Lytic	Meaningless. D/A may normally be very high.
Aluminum Lytic	15%
Tantalum Lytic	15%
Ceramic	10%
All others	1%

Refer to the APPLICATIONS section of this manual for capacitor type identification.

Table 1 — Maximum amounts of Dielectric Absorption.

Measuring Capacitor Leakage (In microamps)

Capacitor leakage occurs when some of the voltage from one plate flows (leaks) through the dielectric to the other plate. The amount of leakage current through the dielectric depends on the voltage applied across the plates. For this reason, always check a capacitor for leakage at (or as close as possible to) its rated voltage. Voltages up to 999.9 volts may by applied with the LC102.

To check capacitors for leakage, enter the working voltage of the capacitor and press the CAPACITOR LEAKAGE button. Compare the measured leakage current to the maximum allowable amounts in the leakage charts. The capacitor is good if the measured leakage is below the amount shown in the chart. A fully automatic GOOD/BAD test may also be used to check capacitors for leakage. This test is explained on page 26.

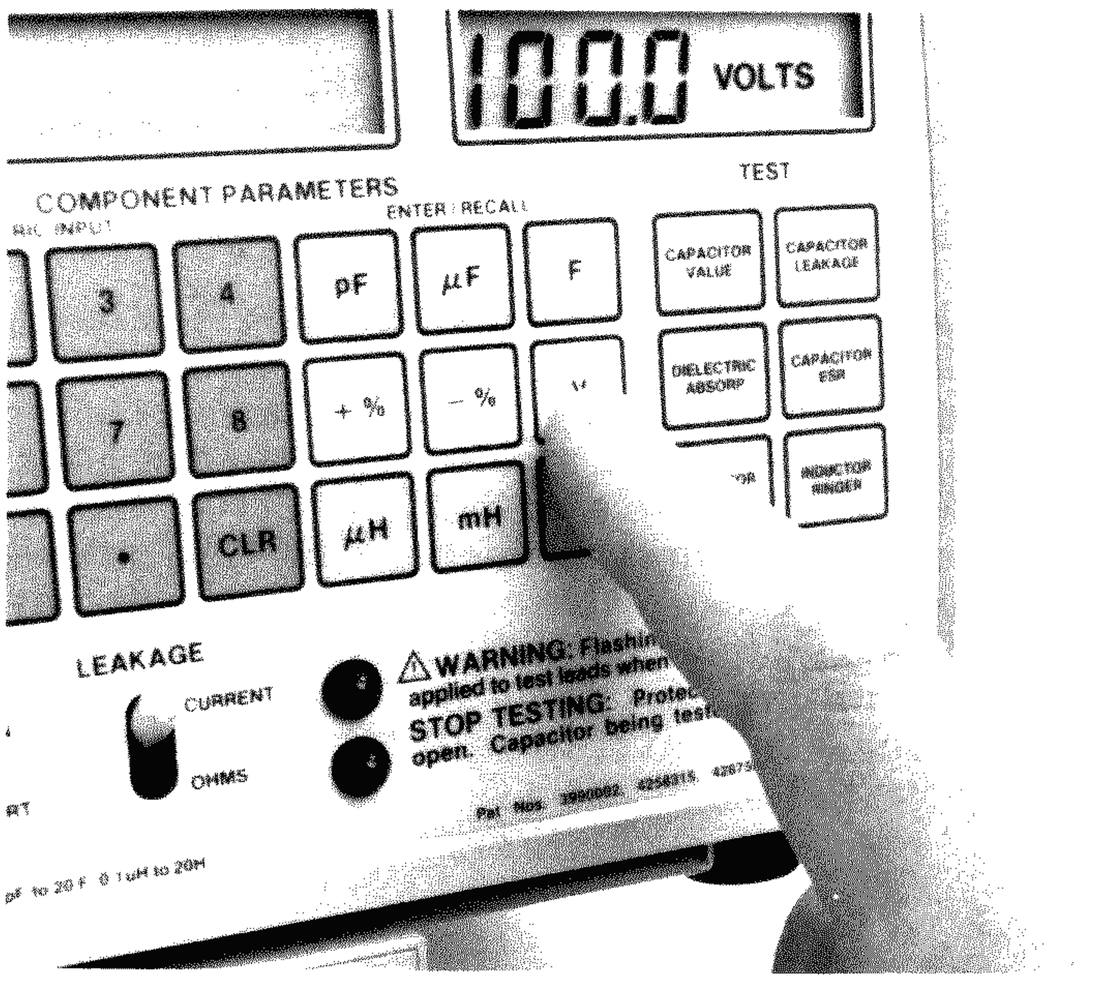

Fig. 16 — To test capacitor leakage, enter the working voltage of the capacitor.

To measure capacitor leakage:

1. Connect the capacitor to the test leads. If the capacitor is polarized, connect the red test clip to the "+" capacitor terminal and the black test clip to the "–" terminal.

2. Set the LEAKAGE switch to the "CURRENT" position to read the leakage of the capacitor in uA or mA.

3. Enter the normal working voltage of the capacitor as explained earlier in the section "Entering Component Parameters" on page 16.

WARNING

The LC102 is designed to be operated by a technically trained person who understands the shock hazard of up to 1000 volts applied to the test leads during the capacitor leakage test. DO NOT hold the capacitor in your hand, or touch the test leads or capacitor leads when making the leakage test.

4. Depress the CAPACITOR LEAKAGE button and read the amount of leakage in the LCD display.

5. Compare the measured leakage to the maximum allowable amount listed in the Leakage Charts on pages 23 and 24 for the type, value, and voltage rating of the capacitor you are testing.

NOTE: By entering the Component Type and Value parameters for the capacitor, the LC102 will automatically display the measured leakage along with the same GOOD/BAD indication as the Leakage Charts.

Voltage will be applied to the capacitor as long as the CAPACITOR LEAKAGE button remains depressed, and the leakage readings will decrease as the capacitor continues to charge. Some capacitors may take a few seconds to charge up to the applied voltage and may cause the display to overrange with a flashing "88.88 mA" display. Continue to depress the CAPACITOR LEAKAGE button until the leakage reading drops below the maximum allowable amount listed in the Leakage Chart.

When the CAPACITOR LEAKAGE button is released, the LC102 discharges the capacitor through a low value, high wattage resistor. The LC102 contains safety circuits which sense the voltage across the test leads. Therefore, when you release the CAPACITOR LEAKAGE button after checking a large value capacitor, or after applying a high leakage voltage, the display may show "Wait - - - -" and the STOP TESTING alarm may activate until the voltage is gone from the test leads. All data input and test buttons will be locked out until the display returns to "0000".

Leakage In Paper, Mica and Film Capacitors

Paper, mica and film capacitors should have extremely small amounts of leakage. Measuring any leakage when checking these types of capacitors indicates a bad component. The leakage reading may take 1-2 seconds to show an accurate display while the capacitor charges.

Leakage In Ceramic Capacitors

Leakage in ceramic capacitors is generally very low. Ceramic disc capacitors, however, may have small amounts of normal leakage. Ceramic disc capacitors with voltage ratings above 50 WVDC should have less than 1 uA of leakage. Some discs with working voltages less than 50 WVDC may have a lower insulation resistance, and therefore may show somewhat more leakage, depending upon manufacturer. In general, a 10 WVDC ceramic disc capacitor may show as much as 16 uA of leakage, and 25 WVDC ceramic disc may read up to 2.5 uA of leakage and still be considered good.

Leakage In Aluminum Electrolytics

Because of their larger value and higher leakage characteristics, aluminum electrolytic capacitors may take several seconds to charge. The LC102 display may overrange (flashing 88.88 mA display) indicating the charging current is greater than 20 mA while the capacitor is charging. Table 2 shows the approximate time that you can expect the LC102 to overrange for a given capacitor value and applied voltage. After the LC102 stops overranging, the current will drop in progressivly smaller steps as the capacitor charges. When the cap is fully charged, the leakage readings will change just a few digits up or down. You do not need to wait until an electrolytic capacitor is fully charged to determine if it is good. Simply keep the CAPACITOR LEAKAGE button depressed until the leakage reading falls below the maximum amount shown in the Leakage Charts.

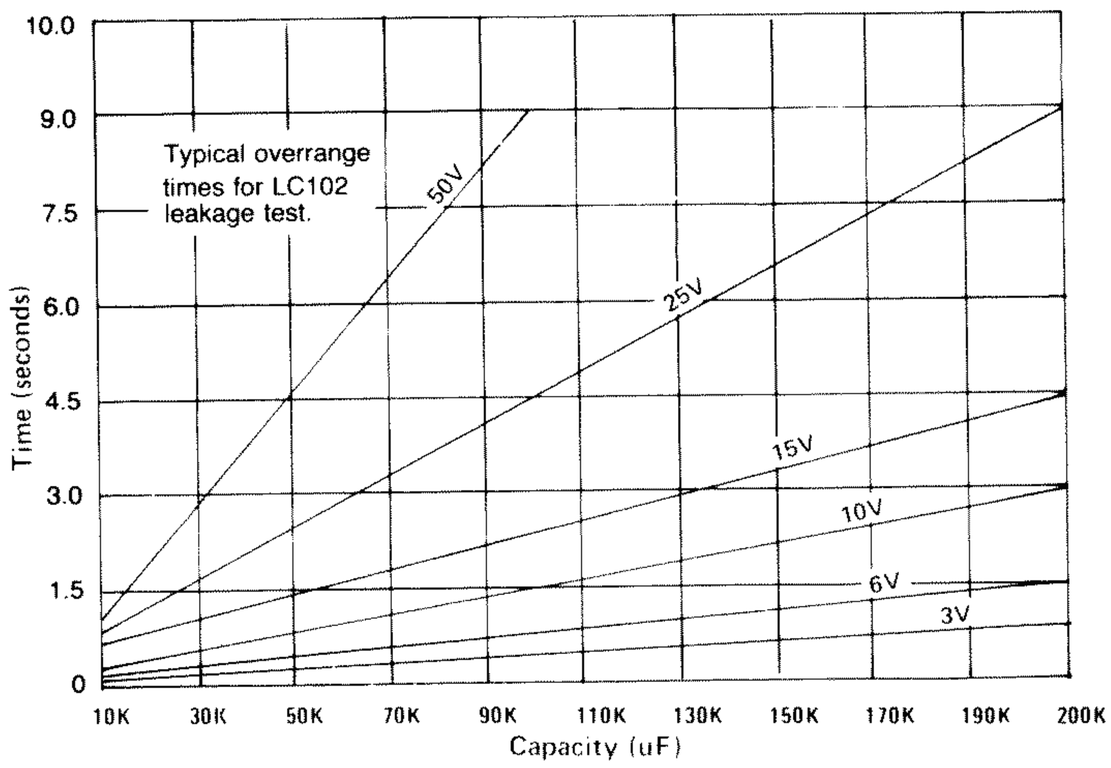

Table 2 — Meter Overrange time versus capacitor value and applied voltage.

Leakage In Tantalum Electrolytics

Tantalum electrolytic capacitors have much lower leakage than aluminum electrolytics of the same size and voltage rating. Therefore, tantalum lytics will give a leakage reading in a much shorter time than an aluminum lytic - typically within 2 to 5 seconds. Compare the measured leakage with the amounts shown in the leakage charts to determine if the capacitor is good or bad.

Leakage In Non-Polarized Electrolytics

Electrolytic capacitors which are non-polarized should be checked for leakage in both directions. This requires that you measure leakage twice, reversing the LC102 test lead connections for the second test. The maximum allowable leakage for a non-polarized electrolytic in either direction is twice that of a similar polarized electrolytic of similar capacitance value and voltage rating.

Leakage charts

The following leakage charts list the maximum amount of allowable leakage for the most common aluminum electrolytics and dipped solid tantalum capacitors. These charts are also duplicated on the PULL CHART below the LC102. Good capacitors (as far as leakage is concerned) will measure lower than the amounts shown in the Leakage Charts. When measuring leakage, you do not need to wait for the readings to drop to zero or to its lowest point. The capacitor is good for any leakage reading which is lower than the amount shown in the chart.

Leakage values shown in Table 3 for aluminum electrolytic capacitors are the worst-case conditions, as specified by the Electronic Industries Association (EIA) standard RS-395. The values are determined by the formulas: L = 0.05 x CV (for CV products less than 1000) or L= 6 x square root of CV (for CV products greater than 1000. (The CV product is equal to the capacitance value multiplied by the voltage rating).

The tantalum capacitor leakage values listed in Table 4 are for the most common type of tantalum capacitors — dipped solid, type 3.3. These values are specified by EIA standard RS-228B, following the formula: L = 0.35 x square root of CV. In a few applications outside of consumer service, tantalum capacitors other than type 3.3 may be encountered. Refer to the manufacturers specifications for the maximum allowable leakage for these special capacitor types.

Maximum Allowable Leakage (in Microamps)

Standard Aluminum Electrolytic Capacitors

Capacity in uF	1.5V	3.0V	6.0V	10V	15V	20V	25V	35V	50V	100V	200V	300V	400V	500V	600V	1000V
1.0	5	5	5	5	5	5	5	5	5	5	10	15	20	25	30	50
1.5	5	5	5	5	5	5	5	5	5	8	15	23	30	38	45	232
2.2	5	5	5	5	5	5	5	5	6	11	22	33	44	199	218	281
3.3	5	5	5	5	5	5	5	6	8	17	33	50	218	244	267	345
4.7	5	5	5	5	5	5	6	8	12	23	47	225	260	291	319	411
6.8	5	5	5	5	5	7	9	12	17	34	221	271	313	350	383	495
10	5	5	5	5	8	10	13	18	25	50	268	329	379	424	465	600
15	5	5	5	8	11	15	19	26	38	232	329	402	465	520	569	735
22	5	5	7	11	17	22	28	39	199	281	398	487	563	629	689	890
33	5	5	10	17	25	33	41	204	244	345	487	597	689	771	844	1090
47	5	7	14	24	35	47	206	243	291	411	582	712	823	920	1008	1301
68	5	10	20	34	192	221	247	293	350	495	700	857	990	1106	1212	1565
100	8	15	30	50	232	268	300	355	424	600	849	1039	1200	1342	1470	1897
150	11	23	45	232	285	329	367	435	520	735	1039	1273	1470	1643	1800	2324
220	17	33	218	281	345	398	445	526	629	890	1259	1541	1780	1990	2180	2814
330	25	50	267	345	422	487	545	645	771	1090	1541	1888	2180	2437	2670	3447
470	35	225	319	411	504	582	650	770	920	1301	1840	2253	2602	2909	3186	4113
680	192	271	383	495	606	700	782	926	1106	1565	2213	2710	3129	3499	3832	4948
1000	232	329	465	600	735	849	949	1122	1342	1897	2683	3286	3795	4243	4648	6000
1500	285	402	569	735	900	1039	1162	1375	1643	2324	3286	4025	4648	5196	5692	7348
2200	345	487	689	890	1090	1259	1407	1665	1990	2814	3980	4874	5628	6293	6893	8899
3300	422	597	844	1090	1335	1541	1723	2039	2437	3447	4874	5970	6893	7707	8443	
4700	504	712	1008	1301	1593	1840	2057	2434	2909	4113	5817	7125	8227	9198		
6800	606	857	1212	1565	1916	2213	2474	2927	3499	4948	6997	8570	9895			
10000	735	1039	1470	1897	2324	2683	3000	3550	4243	6000	8485					
15000	900	1273	1800	2324	2846	3286	3674	4347	5196	7348						
22000	1090	1541	2180	2814	3447	3980	4450	5265	6293	8899						
33000	1335	1888	2670	3447	4221	4874	5450	6448	7707							
47000	1593	2253	3186	4113	5038	5817	6504	7695	9198							
56000	1739	2459	3478	4490	5499	6350	7099	8400								
68000	1916	2710	3832	4948	6060	6997	7823	9256								
100000	2324	3286	4648	6000	7348	8485	9487									
150000	2846	4025	5692	7348	9000											
220000	3447	4874	6893	8899												

NOTE: No industry standards are available for component values in the shaded areas. These values have been extrapolated from existing standards and manufacturers data. All values not shaded are based on existing EIA industry standards.

Table 3 — Maximum allowable leakage for aluminum electrolytics per EIA standards.

Maximum Allowable Leakage (in Microamps)

Dipped Solid Tantalum Capacitors

Capacity	1.5V	3.0V	6.0V	10V	15V	20V	25V	35V	50V	100V	200V	300V	400V	500V	600V	1000V
1.0	1.0	1.0	1.0	1.0	1.0	1.0	1.0	1.0	1.0	3.5	4.9	6.1	7.0	7.8	8.6	11
1.5	1.0	1.0	1.0	1.0	1.0	1.0	1.4	1.0	2.0	4.3	6.1	7.4	8.6	9.6	11	14
2.2	1.0	1.0	1.0	1.0	1.0	1.0	1.8	1.2	2.0	5.2	7.3	9.0	10	12	13	16
3.3	1.0	1.0	1.0	1.0	1.0	1.5	2.2	2.0	3.0	6.4	9.0	11	13	14	16	20
4.7	1.0	1.0	1.0	1.0	1.5	2.0	2.6	2.5	3.5	7.6	11	13	15	17	19	24
6.8	1.0	1.0	1.0	1.5	2.0	2.5	3.0	3.0	6.5	9.1	13	16	18	20	22	29
10	1.6	1.6	1.6	2.0	2.5	3.0	4.0	5.0	7.8	11	16	19	22	25	27	35
15	2.2	2.2	2.2	2.5	3.0	4.0	7.0	5.0	9.6	14	19	23	27	30	33	43
22	2.8	2.8	2.8	3.0	5.0	9.5	10	10	12	16	23	28	33	37	40	52
33	3.4	3.4	3.4	5.0	7.5	15	10	11	14	20	28	35	40	45	49	64
47	4.0	4.0	4.0	10	10	15	15	16	17	24	34	42	48	54	59	76
68	5.0	5.0	5.0	15	15	20	15	17	20	29	41	50	58	65	71	91
100	10	10	10	15	20	20	17	21	25	35	49	61	70	78	86	111
150	15	15	15	20	20	19	21	25	30	43	61	74	86	96	105	136
220	20	20	20	20	20	23	26	31	37	52	73	90	104	116	127	164
330	20	20	20	20	25	28	32	38	45	64	90	110	127	142	156	201
470	24	24	24	24	29	34	38	45	54	76	107	131	152	170	186	240
680	29	29	29	29	35	41	46	54	65	91	129	158	183	204	224	289
1000	35	35	35	35	43	49	55	65	78	111	157	192	221	247	271	350
1500	43	43	43	43	53	61	68	80	96	136	192	235	271	303	332	429
2200	52	52	52	52	64	73	82	97	116	164	232	284	328	367	402	519
3300	64	64	64	64	78	90	101	119	142	201	284	348	402	450	492	636
4700	76	76	76	76	93	107	120	142	170	240	339	416	480	537	588	759
6800	91	91	91	91	112	129	144	171	204	289	408	500	577	645	707	913
10000	111	111	111	111	136	157	175	207	247	350	495	606	700	783	857	1107
15000	136	136	136	136	166	192	214	254	303	429	606	742	857	959	1050	1356
22000	164	164	164	164	201	232	260	307	367	519	734	899	1038	1161	1272	1642
33000	201	201	201	201	246	284	318	376	450	636	899	1101	1272	1422	1557	2011
47000	240	240	240	240	294	339	379	449	537	759	1073	1314	1518	1697	1859	2399
68000	289	289	289	289	353	408	456	540	645	913	1291	1581	1825	2041	2236	2886
100000	350	350	350	350	429	495	553	655	783	1107	1565	1917	2214	2475	2711	3500
150000	429	429	429	429	535	606	678	802	959	1356	1917	2348	2711	3031	3320	4287
200000	495	495	495	495	606	734	783	971	1100	1570	2210	2710	3130	3500	3830	5191

NOTE: No industry standards are available for component values in the shaded areas. These values have been extrapolated from existing standards and manufacturers data. All values not shaded are based on existing EIA industry standards.

Table 4 — Maximum allowable leakage for solid tantalum electrolytics per EIA standards.

Measuring Capacitor Leakage (In Ohms)

At times it is useful to know the amount of capacitor leakage in terms of resistance. For example, it is often easier to visualize what effect a 1 Megohm resistor will have on a high impedance circuit than it is to translate the effect of a capacitor having 1 microamp of leakage. Yet, as far as the circuit is concerned, the DC loading is the same.

The LC102 uses a regulated DC power supply to provide voltages for checking capacitor leakage. Because a DC voltage is used, the leakage currents can easily be converted to a resistance. Placing the front panel LEAKAGE switch in the "OHMS" position allows the LC102 to display leakage current in ohms.

To measure capacitor leakage in ohms:

1. Connect the capacitor to the test leads. If the capacitor is polarized, connect the red test clip to the "+" capacitor terminal and the black test clip to the "–" terminal.

2. Set the LEAKAGE switch to the "OHMS" position to read the leakage current in ohms.

3. Enter the normal working voltage of the capacitor as explained earlier in the section "Entering Component Parameters" on page 16.

WARNING

The LC102 is designed to be operated by a technically trained person who understands the shock hazard of up to 1000 volts applied to the test leads during the capacitor leakage test. DO NOT hold the capacitor in your hand, or touch the test leads or capacitor leads when making the capacitor leakage test.

4. Depress the CAPACITOR LEAKAGE button and read the amount of leakage resistance in the LCD display.

Fig. 17 — Place the LEAKAGE switch in the "ohm" position to measure leakage resistance.

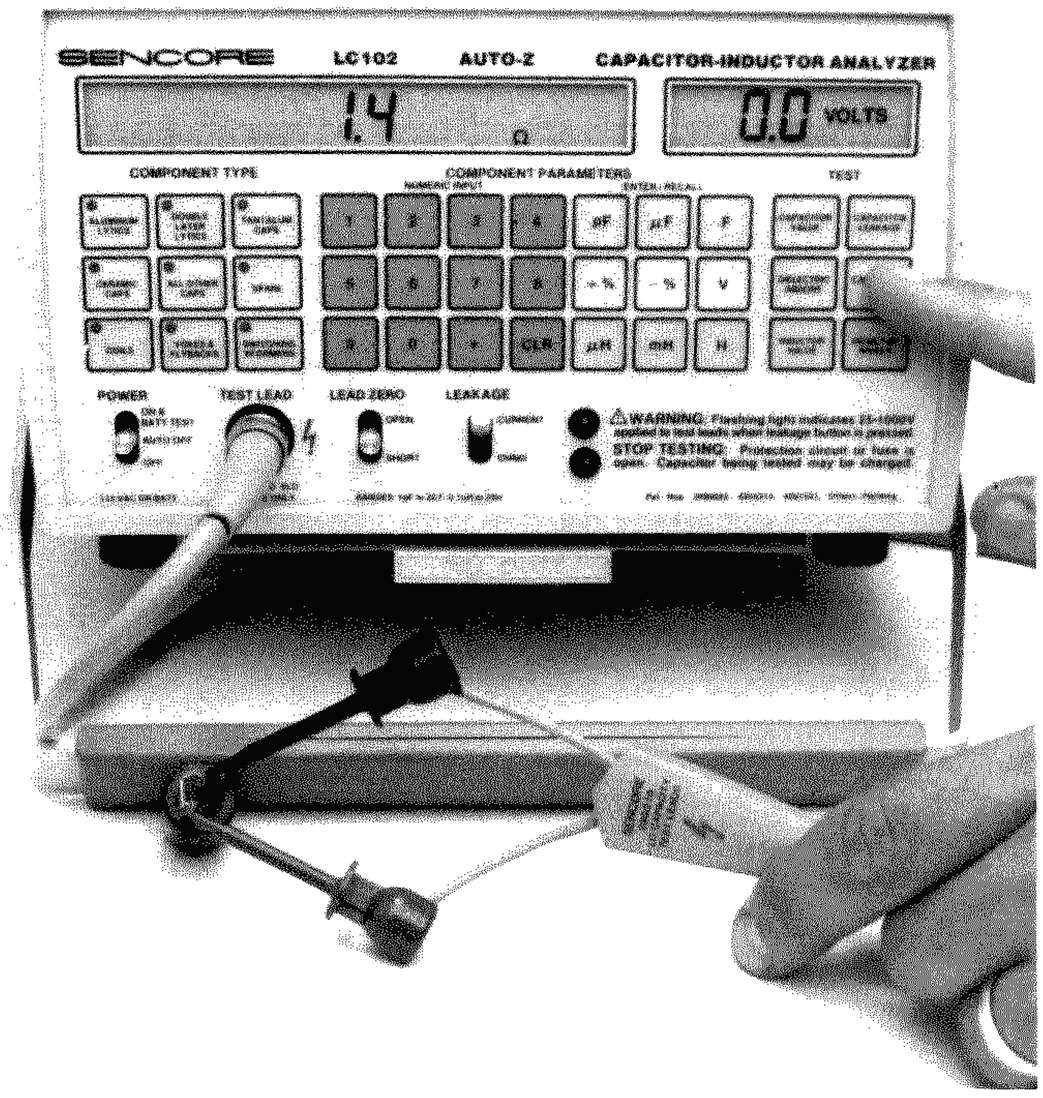

Fig. 18 - Depress the ESR button and read the amount of ESR on the LCD display.

To measure capacitor ESR:

1. Zero the test leads, as explained on page 16.

2. Connect the capacitor to the test leads. If the capacitor is polarized, be sure to connect the black test clip to the "–" terminal of the capacitor and the red test clip to the "+" capacitor terminal.

3. Depress the CAPACITOR ESR button and read the amount of ESR in ohms on the digital display.

4. Compare the measured ESR to the value listed in the following ESR tables for the capacitor type, value, and voltage rating of the capacitor you are testing.

NOTE: By entering the component type, working voltage, and value parameters for the capacitor, the LC102 will automatically display the measured ESR along with the same GOOD/BAD indication as the ESR tables.

Measuring Capacitor ESR

Equivalent Series Resistance (ESR) occurs when a capacitor develops abnormally high internal resistance. The LC102 tests capacitors for abnormal amounts of internal resistance using a patented ESR test.

To test a capacitor for excessive ESR, simply press the CAPACITOR ESR button and compare the measured ESR to the maximum allowable ESR listed in Table 5 for aluminum electrolytic capacitors, and Table 6 for tantalum capacitors. A fully automatic GOOD/BAD test may also be used to test capacitors for excessive ESR. This test is explained on page 26.

Maximum Allowable ESR (in Ohms)

Standard Aluminum Electrolytic Capacitors

CAPACITY in uF	1.5V	3.0V	6.0V	10V	15V	20V	25V	35V	50V	100V	200V	300V	400V	500V	600V	1000V
1.0	663	663	663	663	464	464	464	464	332	332	265	265	265	265	265	265
1.5	442	442	442	442	310	310	310	221	221	177	177	177	177	177	177	177
2.2	302	302	302	302	211	211	211	151	151	121	121	121	121	121	121	121
3.3	201	201	201	201	141	141	141	101	101	80	80	80	80	80	80	80
4.7	141	141	141	141	99	99	99	71	71	56	56	56	56	56	56	56
6.8	98	98	98	98	68	68	68	49	49	39	39	39	39	39	39	39
10	66	66	66	66	46	46	46	33	33	27	27	27	27	27	27	27
15	44	44	44	44	31	31	31	22	22	18	18	18	18	18	18	18
22	30	30	30	30	21	21	21	15	15	12	12	12	12	12	12	12
33	20	20	20	20	14	14	14	10	10	8.04	8.04	8.04	8.04	8.04	8.04	8.04
47	14	14	14	14	9.88	9.88	9.88	7.06	7.06	5.65	5.65	5.65	5.65	5.65	5.65	5.65
68	9.76	9.76	9.76	9.76	6.83	6.83	6.83	4.88	4.88	3.90	3.90	3.90	3.90	3.90	3.90	3.90
100	6.63	6.63	6.63	6.63	4.64	4.64	4.64	3.32	3.32	2.65	2.65	2.65	2.65	2.65	2.65	2.65
150	4.42	4.42	4.42	4.42	3.10	3.10	3.10	2.21	2.21	1.77	1.77	1.77	1.77	1.77	1.77	1.77
220	3.02	3.02	3.02	3.02	2.11	2.11	2.11	1.51	1.51	1.21	1.21	1.21	1.21	1.21	1.21	1.21
330	2.01	2.01	2.01	2.01	1.41	1.41	1.41	1.01	1.01	.804	.804	.804	.804	.804	.804	.804
470	1.41	1.41	1.41	1.41	.988	.988	.988	.706	.706	.565	.565	.565	.565	.565	.565	.565
680	.976	.976	.976	.976	.683	.683	.683	.488	.488	.390	.390	.390	.390	.390	.390	.390
1000	.663	.663	.663	.663	.464	.464	.464	.332	.332	.265	.265	.265	.265	.265	.265	.265
1500	.442	.442	.442	.442	.310	.310	.310	.221	.221	.177	.177	.177	.177	.177	.177	.177
2200	.302	.302	.302	.302	.211	.211	.211	.151	.151	.121	.121	.121	.121	.121	.121	.121
3300	.201	.201	.201	.201	.141	.141	.141	.101	.101	.080	.080	.080	.080	.080	.080	.080
4700	.141	.141	.141	.141	.099	.099	.099	.071	.071	.056	.056	.056	.056	.056	.056	.056
6800	.098	.098	.098	.098	.068	.068	.068	.049	.049	.039	.039	.039	.039	.039	.039	.039
10000	.066	.066	.066	.066	.046	.046	.046	.033	.033	.027	.027	.027	.027	.027	.027	.027
15000	.044	.044	.044	.044	.031	.031	.031	.022	.022	.018	.018	.018	.018	.018	.018	.018
22000	.030	.030	.030	.030	.021	.021	.021	.015	.015	.012	.012	.012	.012	.012	.012	.012
33000	.020	.020	.020	.020	.014	.014	.014	.010	.010							
47000	.014	.014	.014	.014	.010	.010	.010									
56000	.012	.012	.012	.012												
68000	.010	.010	.010	.010												

NOTE: No industry standards are available for component values in the shaded area. These values have been extrapolated from existing standards and manufacturers data. All values not shaded are based on existing EIA industry standards.

Table 5 — Maximum allowable ESR for aluminum electrolytics per EIA standards.

Capacitor Automatic GOOD/BAD Testing

The LC102 AUTO-Z can automatically display a "GOOD/BAD" indication for capacitor parameter tests. The automatic tests are much faster than manual parameter tests, since you do not have to look up the result in a chart, or interpolate between listed values. The LC102 compares the measured values of dielectric absorption, leakage, and ESR to tables and formulas stored in its microprocessor memory. The tables and formulas in the AUTO-Z memory are the same as those printed in this manual, and are based on EIA standards and manufacturers data. Not every parameter for some capacitor types are specified by EIA standards or manufacturer's data. The LC102 will not produce a "GOOD/BAD" display for capacitor parameters not covered by industry accepted standards. The capacitor types and parameters which will produce a "GOOD/BAD" indication are listed in Table 7.

Maximum Allowable ESR (in Ohms)

Dipped Solid Tantalum Capacitors

CAPACITY in uF	1.5V	3.0V	6.0V	10V	15V	20V	25V	35V	50V	100V	200V	300V	400V	500V	600V	1000V
1.0	133	133	133	79.6	79.6	79.6	79.6	66.3	66.3	66.3	66.3	66.3	66.3	66.3	66.3	66.3
1.5	88.4	88.4	88.4	53.1	53.1	53.1	53.1	44.2	44.2	44.2	44.2	44.2	44.2	44.2	44.2	44.2
2.2	60.3	60.3	60.3	36.2	36.2	36.2	36.2	30.1	30.1	30.1	30.1	30.1	30.1	30.1	30.1	30.1
3.3	40.2	40.2	40.2	24.1	24.1	24.1	24.1	20.1	20.1	20.1	20.1	20.1	20.1	20.1	20.1	20.1
4.7	28.2	28.2	28.2	16.9	16.9	16.9	16.9	14.1	14.1	14.1	14.1	14.1	14.1	14.2	14.1	14.1
6.8	19.5	19.5	19.5	11.7	11.7	11.7	11.7	11.7	11.7	11.7	11.7	11.7	11.7	11.7	11.7	11.7
10	13.3	13.3	13.3	7.96	7.96	7.96	7.96	7.96	7.96	7.96	7.96	7.96	7.96	7.96	7.96	7.96
15	8.84	8.84	8.84	5.31	5.31	5.31	5.31	5.31	5.31	5.31	5.31	5.31	5.31	5.31	5.31	5.31
22	6.03	6.03	6.03	3.62	3.62	3.62	3.62	3.62	3.62	3.62	3.62	3.62	3.62	3.62	3.62	3.62
33	4.02	4.02	4.02	2.41	2.41	2.41	2.41	2.41	2.41	2.41	2.41	2.41	2.41	2.41	2.41	2.41
47	2.82	2.82	2.82	1.69	1.69	1.69	1.69	1.69	1.69	1.69	1.69	1.69	1.69	1.69	1.69	1.69
68	1.95	1.95	1.95	1.17	1.17	1.17	1.17	1.17	1.17	1.17	1.17	1.17	1.17	1.17	1.17	1.17
100	1.33	1.33	1.33	0.80	0.80	0.80	0.80	0.80	0.80	0.80	0.80	0.80	0.80	0.80	0.80	0.80
150	0.88	0.88	0.88	0.88	0.88	0.88	0.88	0.53	0.53	0.53	0.53	0.53	0.53	0.53	0.53	0.53
220	0.60	0.60	0.60	0.60	0.60	0.60	0.60	0.36	0.36	0.36	0.36	0.36	0.36	0.36	0.36	0.36
330	0.40	0.40	0.40	0.40	0.40	0.40	0.40	0.24	0.24	0.24	0.24	0.24	0.24	0.24	0.24	0.24
470	0.28	0.28	0.28	0.28	0.28	0.28	0.28	0.17	0.17	0.17	0.17	0.17	0.17	0.17	0.17	0.17
680	0.20	0.20	0.20	0.20	0.20	0.20	0.20	0.12	0.12	0.12	0.12	0.12	0.12	0.12	0.12	0.12
1000	0.13	0.13	0.13	0.13	0.13	0.13	0.13	0.08	0.08	0.08	0.08	0.08	0.08	0.08	0.08	0.08
1500	0.09	0.09	0.09	0.09	0.09	0.09	0.09	0.05	0.05	0.05	0.05	0.05	0.05	0.05	0.05	0.05
2200	0.06	0.06	0.06	0.06	0.06	0.06	0.06	0.04	0.04	0.04	0.04	0.04	0.04	0.04	0.04	0.04
3300	0.04	0.04	0.04	0.04	0.04	0.04	0.04	0.02	0.02	0.02	0.02	0.02	0.02	0.02	0.02	0.02
4700	0.03	0.03	0.03	0.03	0.03	0.03	0.03	0.02	0.02	0.02	0.02	0.02	0.02	0.02	0.02	0.02
6800	0.02	0.02	0.02	0.02	0.02	0.02	0.02	0.01	0.01	0.01	0.01	0.01	0.01	0.01	0.01	0.01

NOTE: No industry standards are available for component values in the shaded areas. These values have been extrapolated from existing standards and manufacturers data. All values are based on existing EIA industry standards.

Table 6 — Maximum allowable ESR for dipped solid tantalum electrolytics per EIA standards.

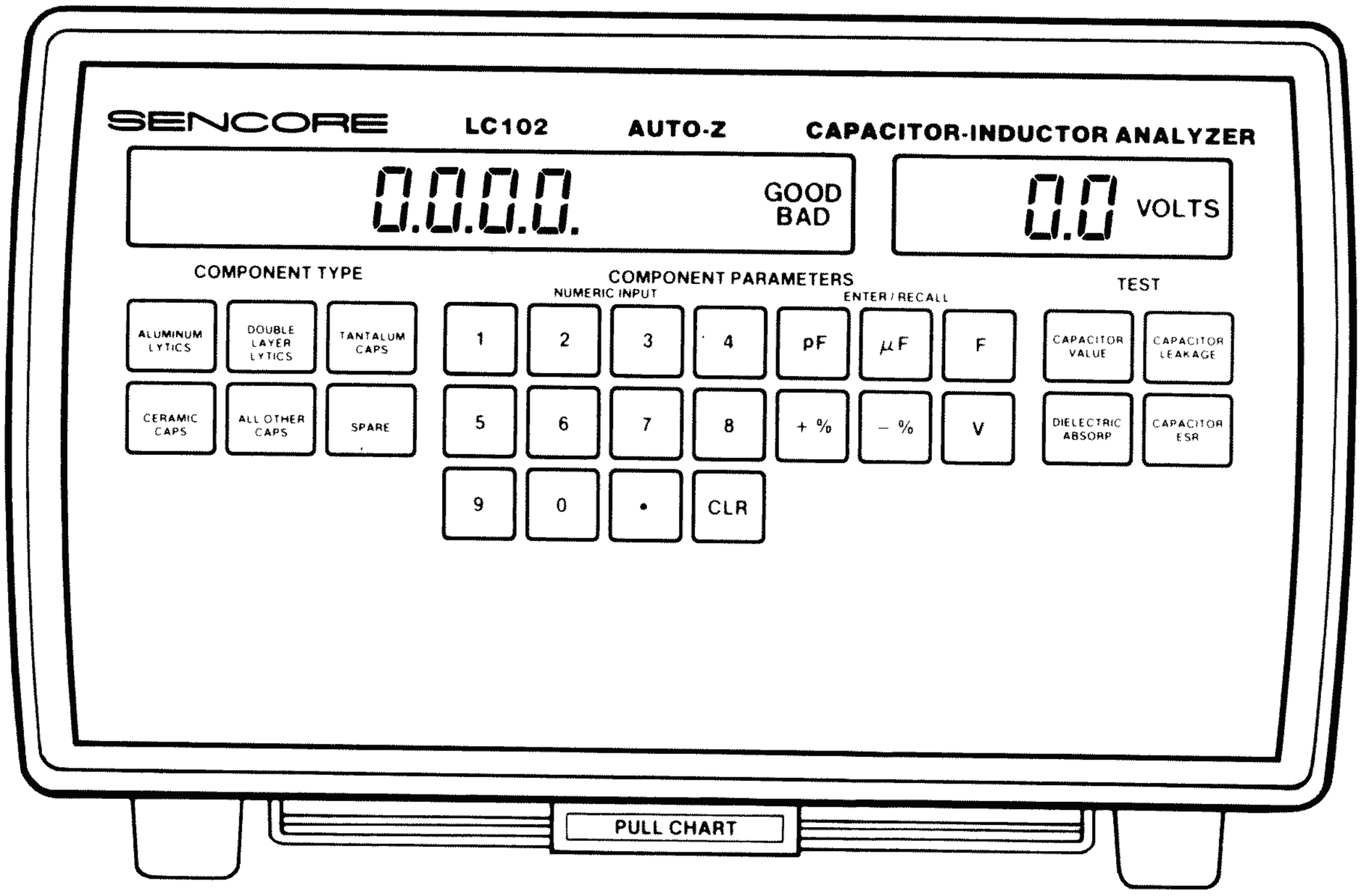

Fig. 19 - Controls used for capacitor GOOD/BAD testing.

CAPACITOR TYPE	TESTS TO PERFORM			
	Value	Leakage	D/A	ESR
Aluminum Lytic	x	x	x	x
Double Layer Lytic	x	x		x
Tantalum	x	x	x	x
Ceramic	x	x		
All other caps (paper, film, mylar, etc.)	x	x		

Table 7 — The LC102 will provide an automatic GOOD/BAD test of the capacitor parameters shown here.

To perform an automatic GOOD/BAD test, you must enter the capacitor type, capacitance value, and voltage rating of the capacitor to be tested so the LC102 can determine the GOOD/BAD limits. If you desire to grade capacitors according to value, you must also enter the desired "+" and "−" value tolerances. The value tolerances, however, do not need to be entered for automatic GOOD/BAD tests of leakage, ESR, or dielectric absorption.

TEST	CAP VALUE	+%	-%	CAP VOLTAGE	COMPON. TYPE
Cap. Value	X	X	X		
Cap. Leakage	X			X	X
Cap. ESR	X			X	X
Cap. D/A	X			X	X

Table 8 — These parameters must be entered into the AUTO-Z for complete GOOD/BAD test of a capacitor.

To perform an automatic GOOD/BAD capacitor test

1. Zero the test leads.

2. Connect the capacitor to the test leads.

3. Place the LEAKAGE switch in the "CURRENT" position. The LC102 will not give a GOOD/BAD reading with the switch in the "OHMS" position.

4. Enter the component type, value, and voltage rating of the capacitor to be tested. (Refer to the section "Entering Component Data" on page 16.)

5. To grade capacitors according to value, enter the "+" and "−" value tolerance.

6. Push the desired capacitor TEST button.

7. Read the test result in the LCD along with the GOOD/BAD indication.

8. The display must show a "GOOD" reading for all of the tests listed in table 7 under the type of capacitor being tested.

NOTE: The leakage test function may require from 4 to 8 display updates for the leakage value to settle before a GOOD/ BAD indication is displayed.

Fig. 20 - The LC102 provides an automatic GOOD/BAD component indication.

Inductor Testing

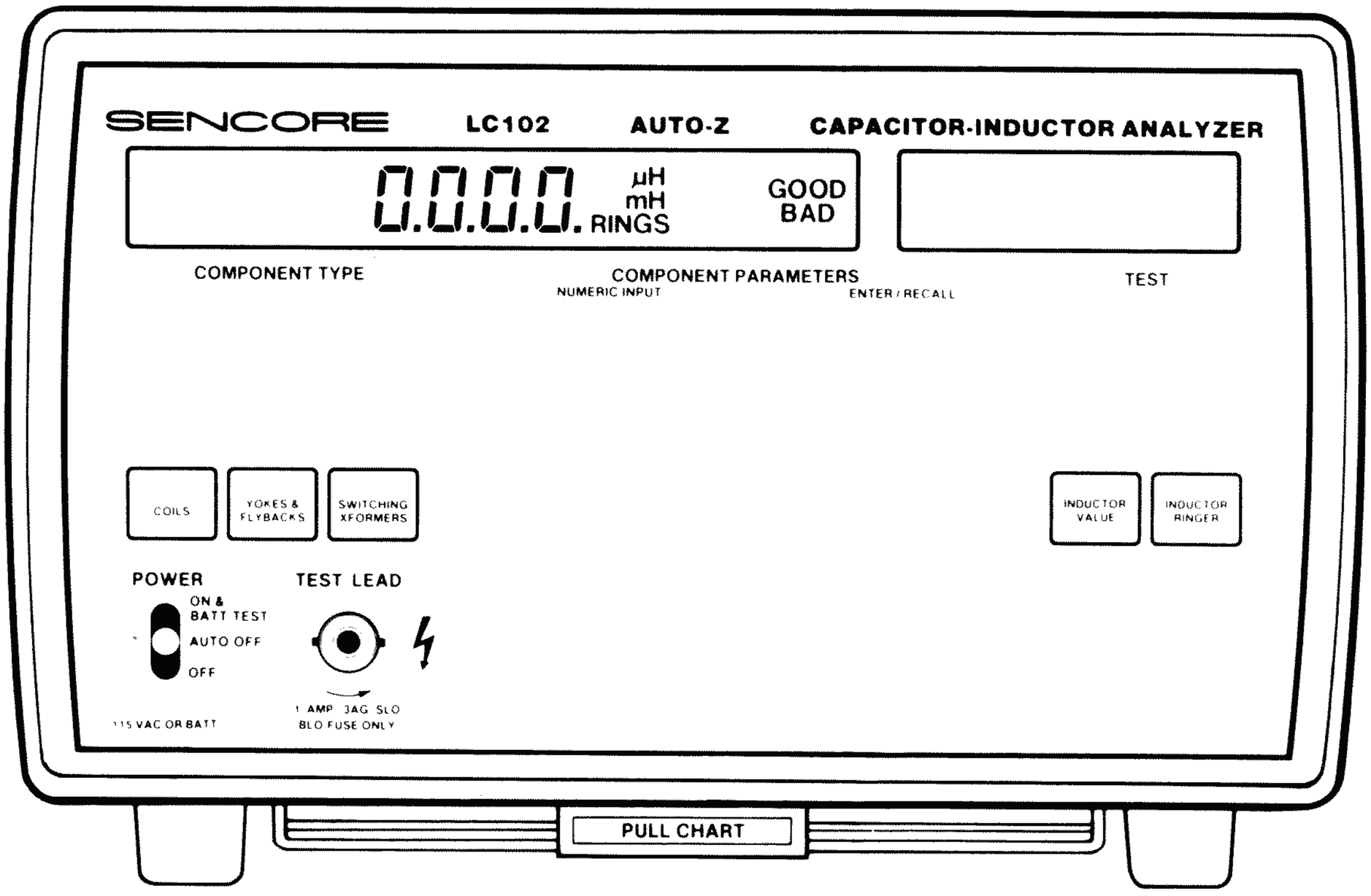

Fig. 21 — Controls used for inductor testing.

The LC102 AUTO-Z measures the true inductance of coils using a fast, reliable patented test. Coils from .1uH to 19.99 H are automatically measured for value by connecting the test leads and pressing the test button. A patented Ringer test dynamically checks the "Q" of the coil and provides a proven GOOD/BAD check.

Balancing Out Lead Inductance

The LC102 test leads have a small amount of inductance which must be balanced out for greater accuracy when measuring inductor values smaller than 1000 uH. This lead inductance is balanced out with the LEAD ZERO switch.

To balance out test lead inductance

1. Connect the test leads to the TEST LEAD input jack on the LC102.

2. Connect the red and black test clips together.

3. Move the LEAD ZERO switch to the "SHORT" position, and release when a "--" begins to move through the display.

4. The test lead inductance will automatically be balanced out for all subsequent inductance tests as long as the AUTO-Z remains on.

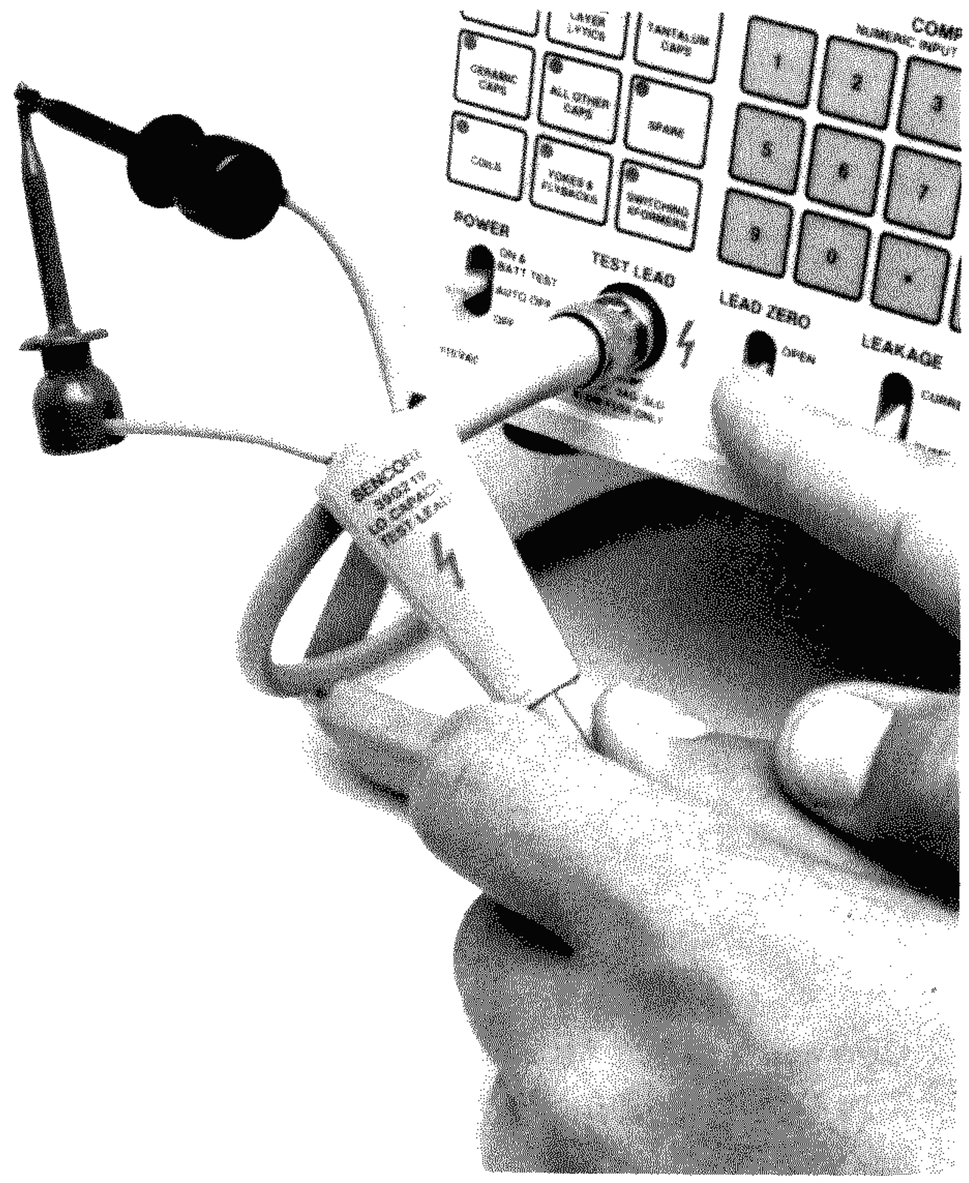

Fig. 22 - Connect the test leads together and push the LEAD ZERO button to "SHORT" to balance out the test lead impedance when checking small value inductors.

NOTE: Zeroing or not zeroing the test leads will not affect the Ringer test.

Inductor Value Testing

Inductors are tested for value with the LC102 by simply connecting the inductor to the test leads and pushing the INDUCTOR VALUE button. No component type switches need to be selected to measure inductance value. Make sure none of the beige capacitor type buttons are selected, or the LC102 will only display "Error 1" when the inductor test button is pressed.

NOTE: Only the blue color coded LC102 buttons are used for inductor value testing.

To measure inductance value

1. Zero the test leads.

2. Connect the inductor to the test leads.

3. Push the INDUCTOR VALUE button.

4. Read the inductance value on the LCD display.

NOTE: The LC102 LCD display will read "OPEN" if the component connected to the test leads has more than 20 kohms of resistance when the INDUCTOR VALUE button is pressed. Check the connections to the inductor. If you are testing a multitap coil or transformer, be sure you are connected to the proper taps. If the connections are good, the inductor has an open winding and is bad.

Inductor Automatic GOOD/BAD Testing

The LC102 provides two GOOD/BAD tests for inductors. The first GOOD/BAD test is the patented Ringing test which checks for shorted turns (low Q) in the inductor.

The second LC102 GOOD/BAD test compares the actual measured value of an inductor to a user-entered value and tolerances. Both tests will display a GOOD/BAD readout along with the measured parameter.

NOTE: The blue color coded TEST and COMPONENT TYPE Select buttons are used for inductor GOOD/BAD tests.

Checking Inductors with the Ringer Test

A shorted turn in many coils will go unnoticed with a value test, since the shorted turn changes the inductance value only a small amount. The patented Ringer test, however, provides a fast and accurate GOOD/BAD indication of non-iron core coils larger than 10 uH by checking their quality or "Q" factor. The Ringer test is sensitive enough to detect even a single shorted turn on a coil. The AUTO-Z measures Q by applying a pulse to the coil and counting the number of ringing cycles until the ringing dampens to a preset level. A good coil will indicate "GOOD", and 10 or more rings will be shown in the LC102 LCD display. A shorted turn will lower the Q of the coil, causing the LC102 display to read "BAD" and show less than ten rings.

In addition to air core coils and RF chokes, vertical deflection yokes, horizontal flyback transformers and switching power supply transformers are reliably checked with the Ringer test. The LC102 automatically matches the coil impedance to the necessary testing parameters for the inductor type when the proper Inductor COMPONENT TYPE switch is selected. Simply select the component type and press the INDUCTOR RINGER test button to obtain the GOOD/BAD indication. Refer to the APPLICATIONS section of this manual for more details on inductor types.

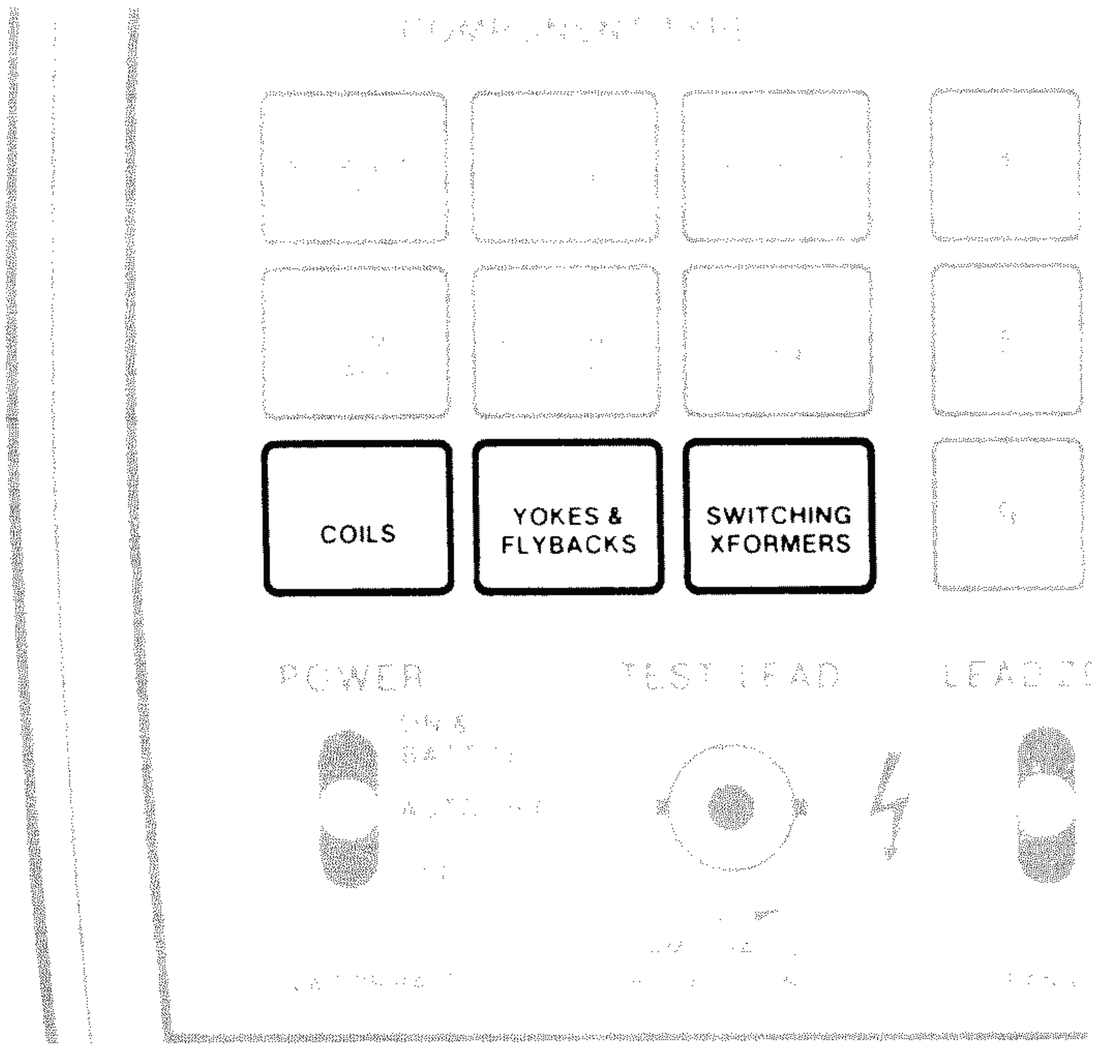

Fig. 23 — The inductor COMPONENT TYPE switches match the Ringer test circuits to the inductor impedance.

To perform the Ringer test

1. Connect the coil to the LC102 test leads.

2. Select the proper inductor COMPONENT TYPE switch.

3. Push the INDUCTOR RINGER button.

4. Read the condition of the coil as "GOOD" or "BAD" in the LC102 LCD display.

Special Notes On Using The Ringing Test

1. Do not ring coils and transformers having laminated iron cores, such as power transformers, filter chokes and audio output transformers. The iron core will absorb the ringing energy and produce unreliable test results.

2. Good coils below 10 uH may not read "GOOD" because the small inductance value may not allow the coil to ring. Compare the number of rings to a known good coil.

The patented Sencore Ringing test is based on the Q of the coil. However, the readings on the AUTO-Z may not agree with the Q readings obtained using a "Q Meter" or bridge. This is because the Ringing test has been simplified to provide a simple GOOD/BAD test, rather than a frequency dependent reactance/resistance ratio.

Testing Inductor Values Using The GOOD/BAD Test

The LC102 will automatically compare the measured value of an inductor to its marked value and display a good or bad result, based on the component being in or out of tolerance. In order for the AUTO-Z to compare the marked value to the measured value you must program the inductance value and tolerance into the LC102 using the NUMERIC keypad. Then when you push the INDUCTOR VALUE button, the measured inductance value will be displayed along with a GOOD/BAD reading based on the programmed tolerance.

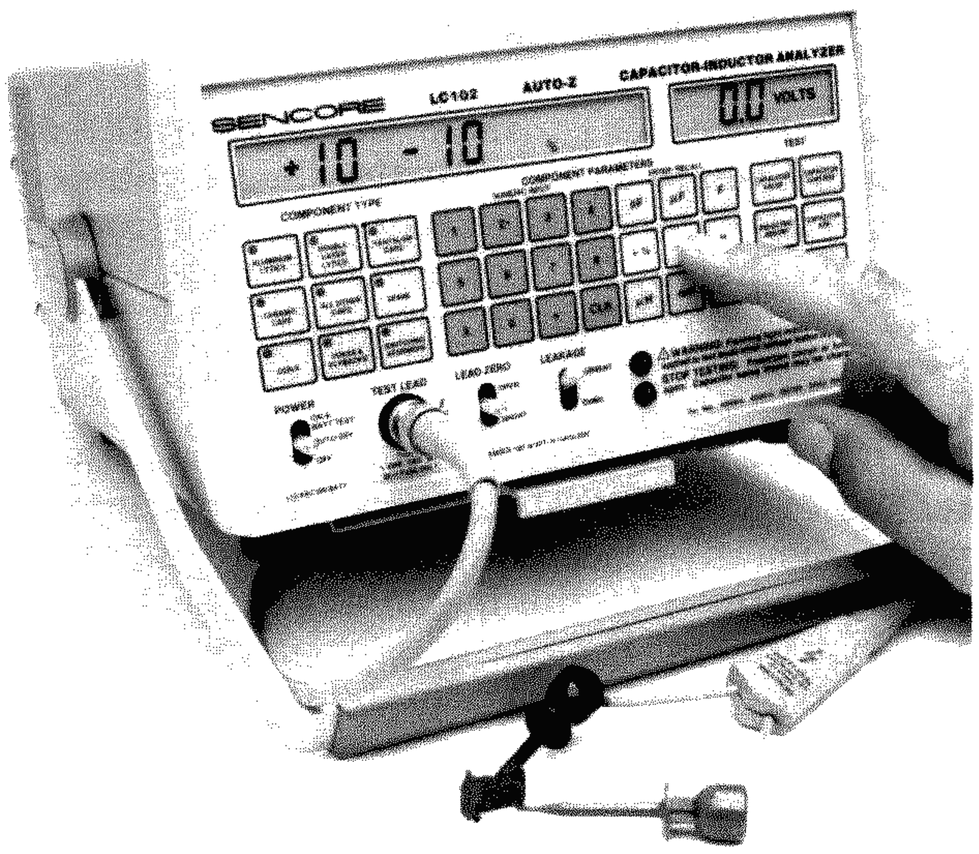

Fig. 24 - The LC102 will provide a GOOD/BAD test of inductance value if the marked value and tolerance is programmed in.

To Use The GOOD/BAD Inductance Test:

1. Zero the test leads.

2. Connect the inductor to the test leads.

3. Enter the marked value, along with the "+" and "−" tolerance of the inductor to be tested. (Refer to the section "Entering Component Data" on page 16.)

4. Push the INDUCTOR VALUE button.

5. If the measured inductance value is within the programmed value tolerance the "GOOD" annunciator will come on.

6. If the measured inductance value is outside the programmed value tolerance, the "BAD" annunciator will come on.

COMPUTER INTERFACE OPERATION

All of the LC102 AUTO-Z tests may be totally automated or incorporated into an automated test system through the use of the IEEE 488 General Purpose Interface Bus (GPIB or RS232). This section explains IEEE operation, but the commands are the same for RS232. The LC102 is interfaced to any IEEE system or controller using the (optional) IB72 IEEE 488 Bus Interface accessory. The IB72 makes the AUTO-Z a fully compatible IEEE instrument.

The LC102 may have either of two functions. As a "listener" it can receive instructions from the IEEE 488 bus controller to change functions or ranges. The LC102 listener functions provide complete automation, as the controller is able to send any values or tolerances needed for good/bad testing comparisons and the controller can select any of the AUTO-Z test functions.

As a "talker" the LC102 can send readings back to the IEEE 488 bus controller as the controller requests them.

CONNECTING THE LC102 FOR IEEE OPERATION

The IB72 IEEE 488 Bus Interface accessory must be connected to the LC102 AUTO-Z for IEEE operation. The IB72 acts as a translator between the GPIB signals and the microprocessor inside the LC102 AUTO-Z. The IB72 connects to the INTERFACE ACCESSORY JACK located on the back of the LC102. The standard GPIB cable then connects to the IB72.

Fig. 25 - The IB72 IEEE 488 Bus Accessory interfaces the LC102 to any GPIB system for automated operation.

When using the LC102 in a Bus system only operate the LC102 from its AC power adapter. The power adapter prevents the auto-off circuits from removing power from the LC102 during an automated test. If the auto-off circuits shut the AUTO-Z down, the bus controller may become hung up in the middle of its program.

Each instrument in an automated bus system must be assigned its own address in order for the controller to send instructions to or receive readings from one instrument at a time. The address of the LC102 is set with a group of miniature slide switches on the back of the IB72. Refer to the IB72 instruction manual for details about addresses and setting these switches.

To connect the LC102 to an automated GPIB system:

1. Remove power to the LC102 and to the IB72.

2. Set the Bus Address slide switches on the back of the IB72 to the address you have assigned to the LC102.

3. Connect the male DIN connector on the IB72 to the Interface Accessory Jack on the back of the LC102.

4. Connect the AC power adapters to the LC102 and to the IB72 and connect them to AC outlets.

5. Confirm that power has reached the units by checking the power LED on the IB72 and the digital readout on the LC102.

6. Follow the instructions for your controller to load and run the software.

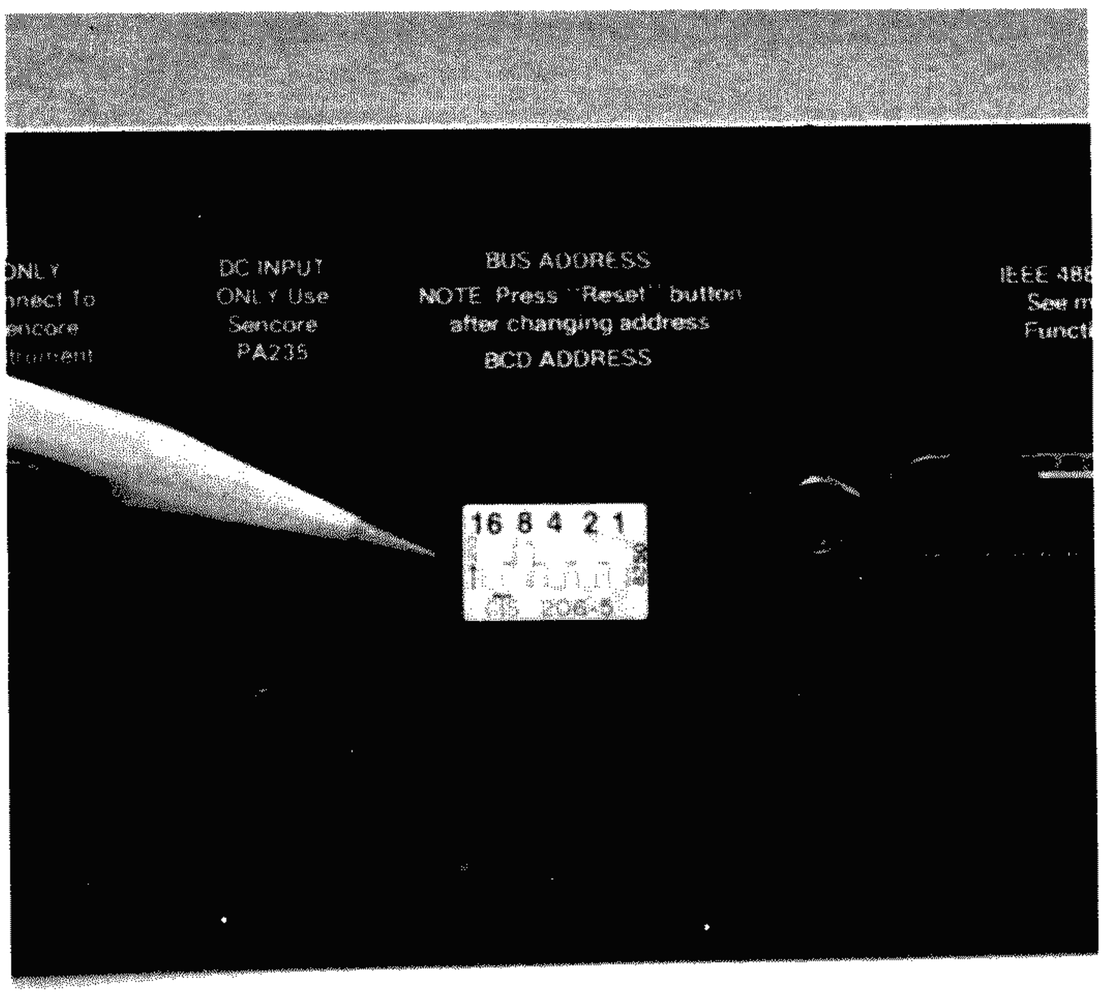

Fig. 26 - The LC102's address is selected by the Bus Address switches located on the rear of the IB72.

SPECIAL NOTE ON IEEE PROGRAMS

The computer programs or software used to automate a system must be written for the specific application being performed. The amount of programming required depends on the type of IEEE 488 controller used and what you want the automation to accomplish. Most IEEE 488 programming is done in the BASIC computer language, although any other language compatible with your controller can be used as well. The examples covered in this section are written in BASIC, since it is the most commonly used computer language for GPIB applications.

SENDING DATA TO THE LC102

As a listener, the LC102 accepts commands from the controller. These commands can be used to select a function or to send parameters to the LC102 for GOOD/BAD comparison testing. The commands sent to the AUTO-Z during bus operation duplicate the front panel pushbuttons. Follow the same programming sequence and range limits as for manual (non-IEEE) operation.

The listener codes consist of one, two, or three characters, and relate to the function being selected or the data being entered. Most listener codes consist only of the code characters. The listener codes used to enter data for good/bad testing consist of a number, followed by the character code.

Most controllers send information over the bus by means of a "print" statement. The information to be sent is usually placed into a variable, and the variable is then printed to the bus, along with the address of the instrument. Study the information with your controller for details about sending information to instruments.

The codes may be sent by the controller as either upper or lower case (capital or small) letters.

All data sent to the LC102 must end with a linefeed character, to be recognized by the LC102. Some controllers automatically add this character to the end of every string of data, while others have a special function which adds the linefeed when activated with a software command. If your controller has neither of these options, you can add a linefeed character by storing the character in a variable and then adding this variable to your data before sending it to the bus.

Fig. 27 - shows how the linefeed character can be stored in a string-variable called "LF$". This variable can then be combined with the function stored in "LISTEN$" before being sent to the bus.

```
100 LF$=CHR$(10): REM  CHR$(10) IS A LINEFEED

110 LISTEN$=LISTEN$+LF$: REM ADDS THE LINEFEED TO THE DATA

120 PRINT LISTEN$: REM   SENDS THE STRING TO THE BUS
```

Fig. 27 - Use this routine to add a linefeed character to the end of data statements sent to the LC102.

The data or listener codes sent to the LC102 fall into four groups: 1. **Component Type Commands,** 2. **Value Multipliers,** 3. **Test Function Commands, and** 4. **General Commands.** All listener codes are listed in Table 9. They are also listed in the Simplified Operating Instructions on the PULL-CHART under the unit for ready reference.

Table 9 Component Type Commands:

Aluminum Lytics	ALM
Double Layer Lytics	DBL
Tantalum Caps	TAN
Ceramic Caps	CER
All Other Caps	AOC
Spare	SPR
Coils	COL
Yokes & Flybacks	YFB
Switching Transformers	SWX

Value Multipliers:
(to be preceeded by numeric value)
pF, uF, F, UH, MH, H, +%, −%, V

Test Function Commands

Capacitor Value	CAP
Capacitor Leakage (current)	LKI
Capacitor Leakage (ohms)	LKR
Dielectric Absorption	D/A
Capacitor ESR	ESR
Inductor Value	IND
Inductor Ringer	RIN

General Commands

Lead Zero Open	LDO
Lead Zero Short	LDS
No Function	NFC
Control Panel On	CPO

Table 9 - IEEE control codes for the LC102.

Component Type Commands

These codes duplicate the front panel COMPONENT TYPE switches and must be sent to the LC102 if you want the test results to be compared to the tables and calculations associated with the LC102 microprocessor. As in non-IEEE operation, the LC102 uses these to establish the GOOD/BAD limits for the leakage, ESR, dielectric absorption, and coil ringing tests. The good/bad results may be in error if the wrong Component Type Command is sent.

NOTE: The LED on the component type switch which indicates if the switch is selected DOES NOT light when the LC102 is under IEEE control.

Value Multipliers:

These GPIB listener codes let the controller send component data information to the LC102 including the ideal component value and value tolerance limits. The codes duplicate the non-IEEE operaton of the component parameters keypad for entering component data.

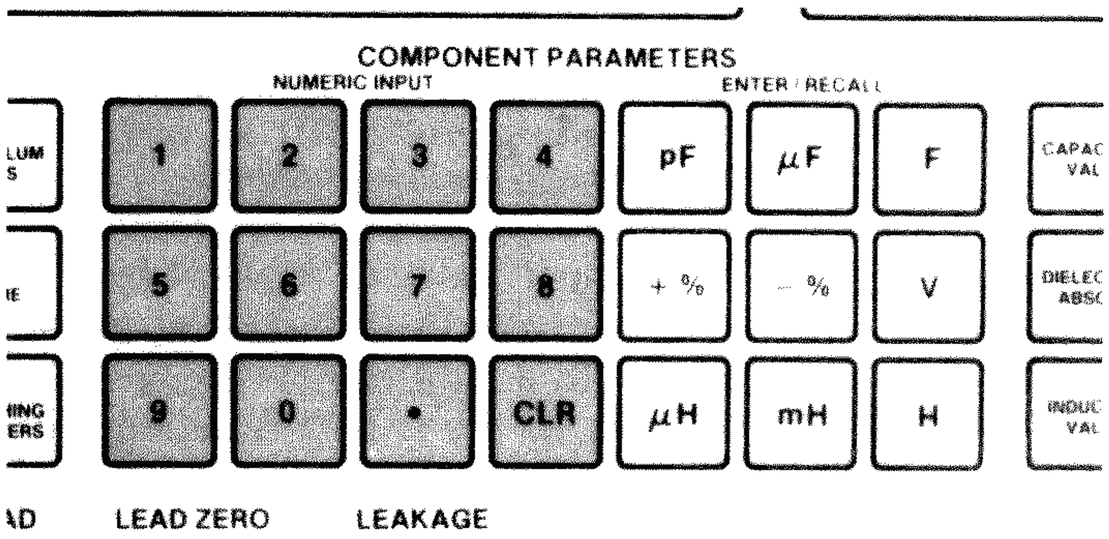

Fig. 28 - During IEEE operation the Value Multiplier Codes allow component data to be entered into the LC102.

As with manual operation, each Value Multiplier Command includes a number, followed by the listener code. There are four types of Value Multipliers for IEEE programming: 1. Capacitor value, 2. Inductor Value, 3. Percent tolerance, and 4. Capacitor voltage. The first three are only used for LC102 automatic GOOD/BAD comparisons. The capacitor voltage code also sets the LC102 power supply to the selected voltage for the leakage test

When sending a component value to the LC102 it is not necessary to send long strings of zeros to establish decimal readings. Instead, use the value multipliers uF (microfarads) pF (picofarads), and F (farads) and the three uH (microhenries), mH (millihenries), and H (henries). For inductors the characters may be sent in upper or lower case. For example, "uF", "UF", or even "Uf " will all produce the same results. The LC102 also ignores any blank spaces between listener code characters. This means that "10UF", "10 UF" and even "10 U F" work equally well.

The complete Value Multiplier code consists of the correct numeric value, the Value Multiplier, and the End Terminator. The following examples show valid commands, with the End Terminators not shown:

4.7uF
(enters capacitor value of 4.7 microfarad)

100 pF
(enters capacitor value of l00 picofarads)

15 V
(enters leakage voltage of 15 volts)

20+ %
(enters value tolerance of +20%)

5H
(enters inductance value of 5 henries)

The amount of Component data which needs to be entered with the IEEE Value Multiplier codes for a GOOD/BAD test depends on the LC102 function. The chart in Table 10 shows the component parameters needed for each GOOD/BAD test. Sending additional data to the LC102 will not affect the tests.

TEST	CAP VALUE	IND VALUE	+%	-%	CAP VOLTAGE	COMPON. TYPE
Cap. Value	X		*	*		
Cap. Leakage	X				X	X
Cap. ESR	X				X	X
Cap. D/A	X				X	X
Ind. Value		X	*	*		
Ind. Ringing						X

X= Must be entered for GOOD/BAD results.
*= Tolerances are set to zero percent at power-up.

Table 10 - These parameters must be entered for the LC102 to produce a good/bad test result.

NOTE: The LC102 will send good/bad indicators back to the controller for each reading if all necessary information has been supplied. To stop the LC102 from sending the "G" or the "B" as part of its returned data, simply send a zero value reading, such as "0pF". The other Value Multipliers (such as percentages or voltage) will remain in the LC102 memory until changed or until power is removed from the unit.

The plus and minus component tolerance limits must be sent in the correct form. First, the number must be a whole number, with no decimal. Then, the percentages must be within the allowable range. The largest negative number allowed is 99 percent (99-%). and the largest positive number allowed is 100 percent (100+%). Numbers that are outside this range, or that contain a decimal, produce an Error 2 condition.

Setting the Leakage Voltage:

The leakage power supply must be set to the desired voltage before selecting a leakage test with the LKI or the LKR codes. The supply can be set to the nearest tenth of a volt. The listener code simply consists of the desired voltage followed by the letter V and the End Terminator. For example, "100V" sets the supply to produce 100 volts when a leakage function is activated.

The highest voltage which can be programmed into the LC102 is 999.9 volts the lowest is 1 volt. Attempting to enter a voltage higher or lower than this range will produce an Error 2 condition.

The leakage power supply only applies power to the test leads after one of the two leakage functions have been selected with the "LKI" or "LKR" listener code. The power supply automatically removes voltage from the test leads when the controller sends any other listener code, or when the front-panel button is pressed.

Warning

The warning LED on the front of the LC102 will flash as a reminder that a shock hazard of up to 1000 volts may be applied to the test leads when a leakage test is selected. Use extreme caution when the LED is blinking.

NOTE: When not using a leakage test, send the listener code "OV" to the LC102 to prevent accidentally applying a voltage to the test leads.

Test Function Commands:

One of the seven listener Test Function Codes must be sent to the LC102 before the controller can request a reading. The selected function is cancelled by any other listener code sent to the LC102, meaning that a Test Function Command must be the last listener code sent before a reading is requested.

The LC102 will remain in the last function selected until it receives another test function command or listener code. The controller can select an LC102 test, go on to other instruments on the bus, and then come back to the LC102 at a later time to request a reading. This allows tests which require longer times, such as capacitor leakage, to be used without slowing the operation of other instruments on the bus.

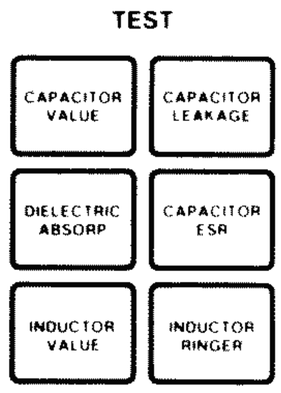

Test Function	Commands
Capacitor Value	CAP
Capacitor Leakage (current)	LKI
Capacitor Leakage (ohms)	LKR
Dielectric Absorption	D/A
Capacitor ESR	ESR
Inductor Value	IND
Inductor Ringer	RIN

Fig. 29 - The LC102 TEST functions are selected via IEEE using the Test Function Commands.

The LC102 starts a test from its beginning every time it receives another Test Function Code. Therefore, if the LC102 has been preset to a function for a delayed reading,make certain that the controller does not re-send the code just before a reading is taken.

General Codes:

The four general listener codes activate special functions when sent to the LC102. The codes let the controller instruct the LC102 to compensate for the test leads, clear a function, or return control of the LC102 to the front-panel switches.

The LC102 must subtract residual effects of the test leads when testing ESR, and small capacitor or inductor values. The Lead Zero (LDO) and Lead Short (LDS) listener codes duplicate the operation of the front panel LEAD ZERO button to null out the effects of the residual resistance, capacitance, and inductance of the test leads and test fixture. The leads must be shorted before sending the LDS command and opened before sending the LDO command. If not, the test lead impedance will not be compensated for.

Note: The leads can be nulled manually before turning control of the LC102 over to the automated system. Simply follow the procedures for manually nulling the effects of the leads, as explained on page 16. The LC102 will remember the correct compensation until the power is turned off.

The No Function Command (NFC) cancels any test that is in progress and places the LC102 into the standby mode (no button pressed). You only need to send "NFC" if you want to clear a test. For example, you may wish to turn off the capacitor value test function while you remove one component and replace it with a different one. It is not necessary to send "NFC" when changing functions with a Test Function Command or when changing component parameters with a Value Multiplier command, since any listener code clears the current function. Sending the "NFC" command when the LC102 is not in a test function has no effect.

IMPORTANT

Do not disconnect or connect any components to the LC102 after performing any capacitor or inductor test without first sending a No Function Command (NFC) or other command first to clear the test function. The LC102 may be damaged if charged capacitor, or static voltage is connected to it. Also, a severe shock hazard may exist to the user if a capacitor is removed after a leakage test without first being discharged.

The front panel switches are automatically disabled whenever the LC102 receives its first GPIB command through the IB72. As a reminder of this, any LEDs associated with the COMPONENT TYPE switches will turn off as soon as the LC102 receives a GPIB command. The panel will remain locked out for all functions until the Control Panel On (CPO) code is sent or until power to the LC102 is removed.

NOTE: One exception is the capacitor leakage function. Depressing any of the front-panel switches will manually un-latch the IEEE use of the leakage power supply.

READING DATA FROM THE LC102

The LC102 will send data to the controller through the computer interface accessory whenever the controller sends the correct talker address and a "Talk" command. The data returned over the bus will be the same as the reading appearing in the LCD display.

Error messages will also be returned over the bus. The error codes will be the same as the codes during manual (non-bus) operation, and are listed on page 37.

NOTE: Most controllers automatically combine the "Talk" command with the instruction containing the address, so there is not a separate step required in the program. Consult the manual for the controller you are using for information on its operation.

Once addressed, the LC102 sends a reading over the bus every time it updates the reading on the LCD display. The software in the controller determines how many readings are recorded. Some applications only need a single reading, while other applications may require collecting several readings in a row.

The only difference between collecting a single reading or collecting a series of readings is in the controller software. If only one reading is desired, the controller will trigger the talker function, and then wait until one reading is received. Then the controller sends a bus instruction which causes the LC102 to stop sending readings.

One way to stop the LC102 from sending readings is to simply address a different instrument on the bus with the controller. The LC102 will remain in the test function, but the readings will not be sent to the controller until the LC102's talk address is again selected by the controller.

A second method to stop the LC102 from sending readings is to send any listener code, including the No Function Code (NFC), to the LC102. This will both stop the readings and place the LC102 into its standby mode. Always use this method if a different component is going to be connected to the LC102.

NOTE: The LC102 does not need (nor does it respond to) the special "GET" (group-execute-trigger) command used in some controllers. It will begin sending results as soon as the talk command is complete.

DATA FORMAT

All data returned from the LC102 falls into a standard data format. Each data string is 17 characters long and contains information in four data fields. The software can keep the entire string of characters together, or it can separate the data into three parts for calculations or processing.

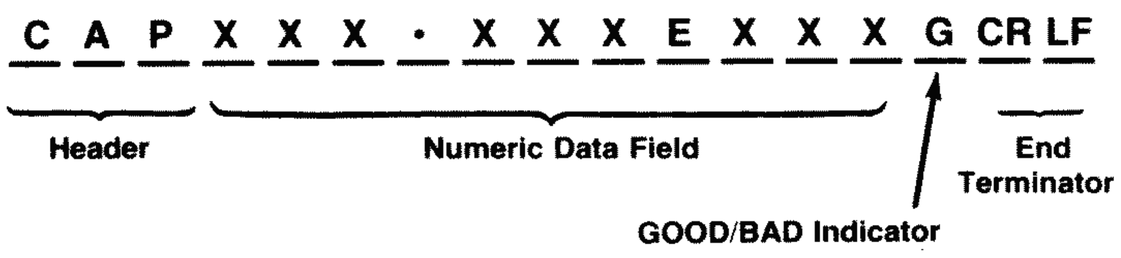

Fig. 30 - The data format returned by the LC102 is a string of 17 characters long.

The four fields of the data string are: 1. Header, 2. Numerical Data Field, 3. GOOD/BAD Indicator, and 4. End Terminator. Each field has the same number of characters for all test functions, allowing the same subroutines to process any returned data. Here are the details for each field of data.

Header: The first three characters identify the test function which produced the reading. The three characters sent back from the instrument are usually the same as the test function commands used to select a function when the LC102 acts as a listener. These codes let the software identify the source of the data, confirm that the correct function is producing readings, or label the data for future retrieval.

In certain cases, the Header identifies some special conditions, such as errors or shorted or open components. The controller software should test for these conditions before processing readings for accurate test results, as explained in the section Error Testing on Page 37.

NOTE: The LC102 will return a Control Panel On (CPO) header if it is addressed to talk but has not received a valid listener code. A No Function Command (NFC) is returned if the LC102 has received a valid listener code, but has not been given a Test Function Command.

Numerical Data Field: The 11 spaces following the Header (characters 4 through 14) contain the numerical results of a talker function. The values returned from a test function are in scientific notation, allowing any value to be represented with the same number of characters. Error codes appear as a single digit (from 1 to 7) without the scientific notation.

GOOD/BAD Indicator: The single space following the Numerical Data Field (the fifteenth character) is reserved for the results of the automatic LC102 GOOD/BAD tests. The single letter "G" or "B" appears in this position when the LC102 has sufficient information to determine if the reading is good or bad. If a piece of data (such as the tolerance or ideal value) is missing, the position occupied by the GOOD/BAD Indicator is left blank.

NOTE: A leakage test function may require from 4 to 8 readings for the leakage to settle before providing a GOOD/BAD indication.

End Terminator: All data ends with both a carriage-return (ASCII decimal 13) and a linefeed (ASCII decimal 10) character, as recommended by the IEEE 488 standard. Many controllers respond to either character, while others only respond if the linefeed is present. A few controllers, however, may stop accepting data when the carriage-return character is sent, leaving the LC102 hung up waiting to send its last (linefeed) character. If this happens, you may need to put an extra GET or INPUT statement into your program to let the LC102 send its last character into an unused variable. Refer to the manual for the specific controller that you are using for information on the end terminator it acts on.

SEPARATING DATA FIELDS

The BASIC commands needed to separate the three fields of information into separate variables are LEFT$ and MID$. The LEFT$ command can collect the three characters of the Header if they need to be compared to information within the program. The MID$ command is used to separate the Numerical Data Field and the GOOD/BAD Indicator from the other results.

```
2000  REM  SUBROUTINE TO SEPARATE DATA INTO 3 PARTS

2010  HEAD$=LEFT$(RESULT$,3): REM FIND HEADER

2020  ANSWER=VAL(MID$(RESULT$,4,11)): REM VALUE

2030  GOOD$=MID$(RESULT$,15,1): REM FIND GOOD/BAD

2040  RETURN: REM JUMP BACK TO MAIN PROGRAM
```

Fig. 31 - The formatted data returned by the LC102 can be easily separated into string-variables using simple BASIC commands.

For example, the controller could place a reading from the LC102 into a string-variable called RESULT$. The subroutine in Figure 31 can then separate the Header into the string-variable HEAD$, the Numerical Data into the numerical-variable ANSWER, and the Good/Bad Indicator into the string-variable GOOD$.

Line 2010 moves the first 3 characters into the Header variable. Line 2020 selects the 11 characters, starting at the fourth position, and then converts the result to a value (with the VAL statement) before placing it into ANSWER. Line 2030 selects the fifteenth character and moves it to GOOD$. This subroutine can be used to separate data from any reading into the three main parts.

Program languages other than BASIC have similar commands which can separate the data into its different fields.

ADVANCED PROGRAMMING IDEAS

After the data has been separated, there are many things your program can do to process it. This section explains how to add these refinements to your BASIC programs. In each case, we will refer to the short subroutine listing in Figure 31, with a GOSUB 2000 statement, resulting in the LC102 reading being stored in the variables HEAD$, ANSWER, and GOOD$.

Error Testing

Your controller software should test for error conditions (often called "error trapping") after every reading has been collected from the LC102 to avoid an error from causing unexpected results. The software can either report the error or skip over it, but should do one or the other without crashing the program. If your program is particularly advanced, it may test for the type of error (as indicated by the error number returned in the Numerical Data Field) and then branch to different parts of the program which can take the correct action to compensate for the error.

Error	Description
1	Component Type selection error
2	Entered value beyond range of unit
3	Entered value beyond range of test
4	Value beyond zeroing limit
5	No voltage entered
6	Invalid IEEE command
7	Component out of test range

Table 11 - Error codes returned by the LC102 during IEEE operation.

Most errors cause the LC102 to return a Header with the three letters "ERR". A simple test for this Header allows the program to be alerted to the error. The value of the Numerical Data Field tells the controller which of seven errors have occurred. The error codes are summarized in Table 11. Refer to the section entitled "Error Codes" on page 16 for a more detailed explanation of each error condition. The program segment listed in Figure 32 tests for errors and then prints a message which indicates its cause.

```
200  GOSUB 2000: REM  SEPARATE DATA INTO PARTS
210  IF HEAD$<>"ERR" THEN GOTO 300: REM NO ERROR FOUND
220  ON ANSWER GOTO 230,240,250,260,270,280,290
230  PRINT "COMPONENT TYPE SELECTION ERROR": GOTO 300
240  PRINT "VALUE BEYOND RANGE OF UNIT": GOTO 300
250  PRINT "VALUE BEYOND RANGE OF TEST": GOTO 300
260  PRINT "VALUE BEYOND ZEROING LIMIT": GOTO 300
270  PRINT "NO VOLTAGE ENTERED": GOTO 300
280  PRINT "INVALID IEEE COMMAND": GOTO 300
290  PRINT "COMPONENT OUT OF TEST RANGE": GOTO 300
300  ...(Rest of Program)
```

Fig. 32 - A simple BASIC subroutine allows any errors to be identified.

Line 210 in Figure 32 causes the program to jump over the error messages for any Header except "ERR". The next line takes advantage of the ON..GOTO function of BASIC which sends the program to line number 230 if ANSWER = **1, to line 240 if ANSWER** = 2, etc.

NOTE: Errors detected by the LC102 do not cause a service request (SRQ) on the bus. The LC102 does not respond to serial or parallel polls because errors are sent as part of the normal data string, instead of with a service request.

GOOD/BAD Results

The string-variable GOOD$ in Figure 31 will contain a single ASCII character, either G or B. The contents of GOOD$ can be tested with simple IF statements and used to produce any desired output. If the GOOD/BAD Indicator Field is blank, the program can indicate that the result is not available because the LC102 has insufficient data to make a comparison. If the field contains the letter "G" or "B", the controller can print a message concerning the quality of the part. Figure 33 lists a BASIC subroutine which can be used to check the GOOD/BAD test result.

```
140  GOSUB 2000: REM SEPARATE DATA INTO PARTS
150  IF GOOD$=" " THEN PRINT "NO GOOD/BAD TEST"
160  IF GOOD$="G" THEN PRINT "THE RESULT IS GOOD"
170  IF GOOD$="B" THEN PRINT "THE RESULT IS BAD"
180  ...(Rest of Program)
```

Fig. 33 - This subroutine can be used to read the result of the LC102 automatic GOOD/BAD test.

Shorted Capacitors:

The LC102 automatically senses if a capacitor is shorted before performing a capacitor value test. If a short is detected, the LC102 sends the letters "SHT" as the Header Field of the returned data and displays "SHORT" in the LCD display. Adding one line of program code will test for this condition. This line should appear before any part of the software program which depends on a value reading, so that the value test will be skipped in case of a shorted capacitor. The program section listed in Figure 34 tests for shorts, prints an error message on the CRT, and jumps to line 400, which handles the error.

```
200  GOSUB 2000: REM SEPARATE DATA INTO PARTS
210  IF HEAD$="SHT" THEN PRINT "CAP IS SHORTED": GOTO 400
220  ...(Rest of Program)...
400  ...(Error Handling Functions)
```

Fig. 34 - The LC102 returns a "SHT" data Header when a shorted capacitor is tested. This sample subroutine checks for the short indication.

Open Inductors:

The LC102 automatically senses if an inductor is open (or if the test leads are not connected to the coil) before performing an inductor value test. If an open is detected, the LC102 sends the letters "OPN" as the Header and displays "OPEN" in the LCD display. One additional program line will test for this condition. Place this line before any portion of the program which depends on an inductor value reading, so that the value test will be skipped in case of an open inductor. The program section listed in Figure 35 tests for opens, prints an error message on the CRT, and jumps to line 300, which handles the error.

```
100  GOSUB 2000: REM  SEPARATE DATA INTO PARTS
110  IF HEAD$="OPN" THEN PRINT "COIL IS OPEN: GOTO 300
120  ...(Rest of Program)...
300  ...(Error Handling Functions)
```

Fig. 35 - Open test leads or an open inductor causes the LC102 to return the data header "OPN". This simple subroutine may be used to check for an open condition.

Making Leakage Tests with IEEE:

When testing for leakage on large capacitors, the first reading returned by the LC102 may be outside the normal leakage limits because the capacitor is charging. In the case of electrolytics, several readings may be needed before the capacitor drops to a "GOOD" level, since an electrolytic also goes through a re-forming process every time it is charged from zero. This means that the controller software should ignore the first few readings in order to accept a meaningful reading.

There are several ways to handle this in the software. For example, the program could place the LC102 into the leakage function (with the "LKI" listener code) and then set a softwear timer to insert the correct delay (based on the normal charging time of the capacitor) before reading the leakage value. During this time, the controller could work with other instruments on the bus to keep the delay from slowing down other steps in the automated system. Rather than a fixed time delay, the software can be written to ignore a certain number of readings before recording the one which is to be checked for value.

In either case, the controller can base its decision on whether the capacitor is good or bad by using the GOOD/BAD Indicator in the returned data. For the automatic GOOD/BAD test to function the capacitor's value, voltage, and type must be sent to the LC102 prior to the test. This allows the LC102 microprocessor to compare the leakage readings to the internal formulas and tables. The program steps listed in Figure 36 can be used to report on the capacitor's condition. The program then jumps to line 200 for further testing. If GOOD$ contains neither a "G" nor a "B" then the steps from 140 to 199 take the steps needed to work with a non-GOOD/BAD test.

```
100  ...(Program with leakage delay)
110  GOSUB 2000: REM  SEPARATE DATA INTO PARTS
120  IF GOOD$="G" THEN PRINT "LEAKAGE IS OKAY": GOTO 200
130  IF GOOD$="B" THEN PRINT "LEAKAGE IS BAD": GOTO 200
140  ...(Program steps for no G/B test) ...
200  ...(Rest of Program)
```

Fig. 36 - The GOOD/BAD indicator Field Returned by the LC102 can be checked to test capacitor leakage.

Making ESR Tests with IEEE:

The capacitor test for Equivalent Series Resistance may cause unexpected program errors if your software does not handle the returned data correctly. Remember that ESR tests are only valid on electrolytic capacitors with values larger than 1 microfarad. Also remember that some capacitors may have such high levels of ESR that the value is above the measuring range of the test. Therefore, make certain that your software tests for the following conditions.

1. An "ERR 1" occurs if any component type other than ALM, DBL, or TAN has been sent to the LC102 in its listener mode.

2. An "ERR 3" occurs if the capacitor under test measures less than 1 microfarad.

3. An "ERR 7" occurs if the amount of ESR is above 2000 ohms.

4. The leads must be zeroed (either manually or by using the "LDS" listener function) before making ESR tests, or the added lead resistance may cause erroneous results.

Programming Examples

It would be impossible to write a program that would work for every LC102 user. First, there are numerous types of bus controllers. Additionally, dozens of personal computers (PC's) can be converted to bus controllers by adding a GPIB control card or expansion device. Each PC could use any of several different GPIB cards. But in addition to hardware differences, the application of the LC102 will be different for each bus system. For example, a Reliability Lab will run different tests than an Incoming Inspection system will.

Several programming hints are provided in this section to help you get your LC102 bus system up and running. The first examples are "building block" programs which allow you to plug the specific details for your controller into an LC102 AUTO-Z test program. Two complete programs are included at the end of this section. Those programs are ready to run, provided you have the same hardware for which they were written.

Sending Listener Codes

The specific steps needed to send listener codes to instruments on the bus depend on the controller you are using. Some controllers only require the addition of a special code (such as a control character) into a standard PRINT statement. Most, however, require several additional initialization steps to tell the controller's microprocessor which expansion slot or memory location contains the interface card, the address of the instrument being addressed, which method is used to address the talkers or listeners, and so on.

This doesn't have to complicate programming, however, if you use subroutines to take care of all these details. You simply debug these subroutines once, and call them each time you send information over the bus. Your main program places a couple of pieces of information into variables before turning control over to the subroutine which, in turn, handles all the details of communicating with the bus.

Fig. 37 shows an example of a program which uses a subroutine at line 10000 to send information to any instrument on the bus. This subroutine needs two pieces of information: the listener address of the instrument and the data to send to it. The primary address is placed into the variable ADDRESS, and the data into the string-variable CODE$ before calling the subroutine. Once ADDRESS has been loaded, it does not need to be changed unless the controller needs to work with a different instrument. This is the reason line 100 is the only one which uses the variable ADDRESS.

Line 10000 will be unique to each controller. Refer to the manual for the specific controller you are using for details on how it sends data to the IEEE bus.

The steps listed in Figure 37 send all the information needed by the LC102 to test an aluminum electrolytic capacitor with an ideal value of 50 uF, a working voltage of 15 volts and a tolerance of +80% and −20%. The primary address of the LC102 is 8. Each "GOSUB 10000" line sends the data to the unit.

```
100   ADDRESS=8: REM  PRIMARY ADDRESS OF LC102
110   CODE$="50 UF": REM IDEAL VALUE
120   GOSUB 10000: REM SEND VALUE TO LC102
130   CODE$="15V": REM WORKING VOLTAGE
140   GOSUB 10000
150   CODE$="ALM": REM CAPACITOR TYPE
160   GOSUB 10000
170   CODE$="80+%": REM POSITIVE TOLERANCE
180   GOSUB 10000
190   CODE$="20-%": REM NEGATIVE TOLERANCE
200   GOSUB 10000
```

Fig. 37 - This sample program uses a subroutine to simplify sending data over the bus to the LC102. The subroutine called up is unique to each controller.

Sending Talker Codes

As with sending listener codes, all the steps needed to transfer information from the LC102 back to the controller can be done in a subroutine which is called every time the program requests a reading. In the example listed in Figure 38, the subroutine is at line 12000. The listener subroutine is still at line 10000.

Some controllers require a different talker and listener address, but these addresses can be calculated by the program. The subroutine at line 10000 calculates the necessary listener address, while the subroutine at line 12000 calculates the needed talker address from the value already stored in the variable ADDRESS. Thus, it is not necessary to place a new value into the ADDRESS variable.

The last line of the subroutine starting at line 12000 includes an INPUT statement which collects the LC102 reading and places it into the string variable RESULT$. RESULT$ is then processed through another subroutine to separate the data into its three parts.

```
210   CODE$="CAP": REM LISTENER CODE FOR CAP VALUE
220   GOSUB 10000: REM SEND CODE TO UNIT
230   GOSUB 12000: REM REQUEST READING FROM UNIT
240   CVALUE$=RESULT$: REM TRANSFER FROM SUBROUTINE
250   CODE$="LKI": REM LISTENER CODE FOR LEAKAGE
260   GOSUB 10000: REM SEND CODE TO UNIT
270   GOSUB 12000: REM REQUEST READING FROM UNIT
280   LEAK$=RESULT$: REM TRANSFER FROM SUBROUTINE
290   CODE$="D/A": REM  CODE FOR DIELECTRIC ABSORB.
300   GOSUB 10000: REM  SAME AS BEFORE
310   GOSUB 12000
320   DA$=RESULT$
330   CODE$="ESR": REM CODE FOR ESR TEST
340   GOSUB 10000
350   GOSUB 12000
360   ESR$=RESULT$
```

Fig. 38 - A subroutine can be used to simplify reading the data sent over the bus by the LC102. The subroutine called is unique to each controller.

Sample Programs

The two sample programs which follow are ready to run. However, they will only work for the type of bus controller stated in the open remark section of the program. Use them as a guide for connecting the LC102 into your IEEE bus system.

```
1  REM  THIS PROGRAM ALLOWS THE USER TO ENTER THE
2  REM  STANDARD VALUES FOR ANY CAPACITOR, SENDS THE
3  REM  VALUES TO THE LC102, AND THEN SHOWS THE RESULTS
4  REM  AS GOOD OR BAD. COPYRIGHT (C) SENCORE FIELD
5  REM  APPLICATION DEPARTMENT, 1987. THIS PROGRAM MAY
6  REM  MAY BE USED AS IS OR MODIFIED BY ANY LC102 OWNER
7  REM  WITHOUT FURTHER PERMISION FROM SENCORE, INC.
10  REM
20 D$ =  CHR$ (4): REM   DOS COMMAND CHARACTER
30 Z$ =  CHR$ (26): REM  IEEE CARD COMMAND CHARACTER
40 Q$ =  CHR$ (17): REM  SCREEN TO 40 COLUMNS
50 G$ =  CHR$ (7): REM   RINGS BELL
60  FOR X = 1 TO 19:BL$ = BL$ + " ": NEXT X: REM
    FORMS 20 BLANK SPACES
70  DATA   ALM,DBL,TAN,CER,AOC
80  FOR X = 1 TO 5: READ CT$(X): NEXT X
1000  REM  ******* INPUT DESIRED VALUES *******
1010  HOME : GOSUB 10200: REM    SELECT PRIMARY ADDRESS
1020  REM  ******* BEGIN IDEAL INPUT *******
1030  HOME : VTAB 7: INVERSE : HTAB 6: PRINT "    ENTER
    IDEAL VALUES:   ": NORMAL
1040  PRINT : HTAB 6: INPUT "   VALUE: ";V$
1050 V =  VAL (V$): REM   CONVERT TO NUMERIC VALUE
1060  IF V = 0 GOTO 1020: REM   ZERO VALUE NOT ACCEPTED
1070  VTAB 9: HTAB 16: PRINT V;"                "
1080  VTAB 11: HTAB 1: INVERSE : PRINT "MULTIPLIER:";:
    NORMAL : PRINT " [1] PF, [2] UF, [3] F  ";: GET K$
1090 MU$ = "F":VM = 1
1100  IF K$ = "1" THEN MU$ = "PF":VM = 1E - 12
1110  IF K$ = "2" THEN MU$ = "UF":VM = 1E - 6
1120  IF K$ < "1" OR K$ > "3" GOTO 1080: REM REPEAT UNTIL
    VALID
1130  VTAB 10: PRINT BL$;BL$: REM  COVER WITH BLANK
    SPACES
1140  VTAB 9: HTAB 25: PRINT MU$: REM  ECHO SELECTION TO
    SCREEN
1150 V$ =  STR$ (V) + MU$: REM  PREPARE STRING TO SEND TO
    METER
1160  HTAB 6: INPUT "      +%: ";PP$
1170 PP =  VAL (PP$): REM   REMOVE NON-NUMERIC CHARACTERS
1180 PP$ =  STR$ (PP) + "+%": REM  PREPARE STRING TO SEND
    TO METER
1190  HTAB 6: INPUT "      -%: ";PN$
1200 PN =  VAL (PN$): REM   REMOVE NON-NUMERIC CHARACTERS
1210 PN$ =  STR$ (PN) + "-%"
1220  HTAB 6: INPUT " VOLTAGE: ";VT$
1230 VT =  VAL (VT$): REM   REMOVE NON-NUMERIC CHARACTERS
1240 VT$ =  STR$ (VT) + "V"
1250  PRINT : PRINT "  ARE THESE VALUES CORRECT? (Y/N)
    ";: GET K$
1260  IF K$ = "y" THEN K$ = "Y"
1270  IF K$ <  > "Y" THEN 1020
1280  HOME : VTAB 7: INVERSE : HTAB 6: PRINT "  SELECT
    CAPACITOR TYPE:  ": NORMAL
1290  PRINT
1300  HTAB 6: PRINT "[1]  ALUMINUM LYTIC"
1310  HTAB 6: PRINT "[2]  DOUBLE LAYER LYTIC"
1320  HTAB 6: PRINT "[3]  TANTALUM LYTIC"
1330  HTAB 6: PRINT "[4]  CERAMIC CAP"
1340  HTAB 6: PRINT "[5]  ALL OTHER CAPS"
1350  PRINT : HTAB 6: PRINT "SELECT NUMBER FOR TYPE: ";:
    GET K$: PRINT K$
1360  IF  ASC (K$) < 49 OR  ASC (K$) > 53 THEN  PRINT
    G$;G$: GOTO 1280: REM   ACCEPT ONLY 1 THROUGH 5
1370 TY$ = CT$( VAL (K$)): REM     SELECT THREE-LETTER
    CODE
1380  VTAB 19: HTAB 6: INVERSE : PRINT "  SENDING VALUES
    TO Z METER  ": NORMAL
1390  GOSUB 10000: REM   TURN ON IEEE CARD
1400  PRINT LA$;Z$;V$: PRINT LA$;Z$;PP$: PRINT
    LA$;Z$;PN$: PRINT LA$;Z$;VT$: PRINT LA$;Z$;TY$
1410  REM ---LA$=LISTEN ADDRESS, Z$=CONTROL-Z
1420  REM  ******* BEGIN TAKING READING *******
1430 FG = 0: REM    RESET 'COMPONENT BAD' FLAG
1440  GOSUB 10100: REM    RETURN COMMUNICATIONS TO
    KEYBOARD
1450  HOME : VTAB 14: HTAB 6: INVERSE : PRINT "  TAKING
    READINGS  ": NORMAL
1460  GOSUB 10000: REM  TURNS ON IEEE CARD
1470 DA$ = "D/A": GOSUB 10500
1480 ZD$ = RZ$
1490 DA$ = "CAP": GOSUB 10500
1500 ZV$ = RZ$
1510 DA$ = "LKI": GOSUB 10500
1520 ZI$ = RZ$
1530 DA$ = "ESR": GOSUB 10500
1540 ZR$ = RZ$
1550 DA$ = "NFC": GOSUB 10500: REM   CANCEL PANEL
1560  GOSUB 10100
1570  REM   ******* PRINT RESULTS *******
1580  HOME : REM   CLEARS SCREEN
1590  PRINT " THE RESULTS OF THIS TEST ARE:": PRINT
1600  PRINT "IDEAL VALUE: ";V$
1610 RE$ = ZV$: REM     LOAD VALUE INTO SUBROUTINE
    VARIABLE
1620  GOSUB 2000: REM   SEPARATE DATA INTO PARTS
1630  IF HE$ = "ERR" THEN  GOSUB 2100: GOTO 1710
1640  IF HE$ = "SHT" THEN  PRINT "CAPACITOR IS SHORTED":
    GOTO 1920
1650  PRINT " MEASURED VALUE: "AN
1660  GOSUB 2200: REM  GET GOOD/BAD RESULT
1670 PC = 100 * (AN - (V * VM)) / (V * VM): REM
    CALCULATE PERCENTAGE
1680 PC =  INT (10 * PC) / 10: REM   SET DECIMAL AT ONE
    PLACE
1690  PRINT " THE VALUE DIFFERED BY "PC"%"
1700  PRINT : PRINT "THE LEAKAGE TESTED AT "VT" VOLTS"
1710 RE$ = ZI$: REM    LOAD LEAKAGE INTO SUBROUTINE
    VARIABLE
1720  GOSUB 2000: REM   SEPARATE DATA INTO PARTS
1730  IF HE$ = "ERR" THEN  GOSUB 2100: GOTO 1770
1740 LK = AN * 1E6
```

```
1750  PRINT "  WAS "LK" MICROAMPERES."
1760  GOSUB 2200: REM    GET GOOD/BAD RESULTS
1770  PRINT : PRINT "D/A TEST:"
1780 RE$ = ZD$: REM    LOAD D/A RESULTS INTO SUBROUTINE
   VARIABLE
1790  GOSUB 2000: REM   SEPARATE DATA INTO PARTS
1800  IF HE$ = "ERR" THEN  GOSUB 2100: GOTO 1840
1810 AN =  INT (10 * AN) / 10: REM   SET DECIMAL TO 1
   PLACE
1820  PRINT " DIELECTRIC ABSORPTION: "AN"%."
1830  GOSUB 2200: REM    GET GOOD/BAD RESULT
1840  PRINT : PRINT "ESR TEST:"
1850 RE$ = ZR$: REM   LOAD ESR VALUE INTO SUBROUTINE
   VARIABLE
1860  GOSUB 2000: REM   SEPARATE INTO PARTS
1870  IF HE$ = "ERR" THEN  GOSUB 2100: GOTO 1900
1880  PRINT " SERIES RESISTANCE: "AN" OHMS."
1890  GOSUB 2200: REM   GET GOOD/BAD RESULTS
1900 GB$ = " GOOD ": IF FG = 1 THEN GB$ = " BAD "
1910  PRINT : PRINT "THE CAPACITOR IS ";: INVERSE : PRINT
   GB$: NORMAL
1920  PRINT : PRINT "END OF RESULTS, PRESS ANY KEY ";:
   GET K$
1930  HOME : VTAB 9: HTAB 6: INVERSE : PRINT " SELECT
   NEXT OPTION: ": NORMAL
1940  PRINT : HTAB 6: PRINT "[1] ENTER NEW VALUE"
1950  HTAB 6: PRINT "[2] MAKE ANOTHER TEST"
1960  HTAB 6: PRINT "[3] REPEAT PRINTOUT"
1970  PRINT : HTAB 6: PRINT "SELECT NUMBER OPTION: ";:
   GET K$
1980  IF K$ < "1" OR K$ > "3" THEN  PRINT G$: GOTO 1930
1990  ON  VAL (K$) GOTO 1020,1420,1570
2000  REM    ###### SUBROUTINE SEPARATES DATA ######
2010 HE$ =  LEFT$ (RE$,3): REM  FIND HEADER
2020 AN =  VAL ( MID$ (RE$,4,11)): REM  FIND NUMERIC
   VALUE
2030 GD$ =  MID$ (RE$,15,1): REM   FIND GOOD/BAD RESULT
2040  RETURN
2100  REM  #######SUBROUTINE FOR ERROR HANDLING#######
2110  PRINT G$;"Z-METER ERROR #"AN" DETECTED:"
2120  ON AN GOTO 2130,2140,2150,2160,2170,2180,2190
2130  PRINT "COMPONENT TYPE SELECTION ERROR": RETURN
2140  PRINT "VALUE BEYOND RANGE OF UNIT": RETURN
2150  PRINT "VALUE BEYOND RANGE OF TEST": RETURN
2160  PRINT "VALUE BEYOND ZEROING LIMIT": RETURN
2170  PRINT "NO VOLTAGE ENTERED": RETURN
2180  PRINT "INVALID IEEE COMMAND": RETURN
2190  PRINT "COMPONENT OUT OF TEST RANGE": RETURN
2200  REM   ###### SUBROUTINE TESTS GOOD/BAD RESULT
   ######
2210  IF GD$ = " " THEN  PRINT "NO GOOD/BAD TEST"
2220  IF GD$ = "G" THEN  PRINT "THE RESULT IS GOOD"
2230  IF GD$ = "B" THEN  PRINT "THE RESULT IS ";: INVERSE
   : PRINT " BAD ": NORMAL :FG = 1
2240  RETURN
9997   REM
   ******************************************************
9998   REM   THE FOLLOWING SUBROUTINES APPLY TO
   ADDRESSING THE APPLE-BRAND IEEE-488 CONTROLLER CARD
   FOR THE APPLE // COMPUTER.
9999   REM
   ******************************************************
10000  REM   ##### SUBROUTINE ENABLES BUS #####
10010  PRINT D$
10015  PRINT D$;"IN#4": REM   CARD IS IN SLOT FOUR
10020  PRINT D$;"PR#4": REM   TURNS ON SLOT FOUR
10030  PRINT "LF1": REM    ENABLES LINEFEED FOR EOF
   CHARACTER
10040  RETURN
10100  REM   ##### SUBROUTINE RETURNS TO KEYBOARD #####
10110  PRINT D$;"PR#0": REM  RETURNS OUTPUT TO CRT
10120  PRINT D$;"IN#0": REM  RETURNS INPUT TO KEYBOARD
10130  RETURN
10200  REM   ##### SUBROUTINE FINDS TALK/LISTEN ADDRESSES
   #####
10210  REM  RETURNS TALK ADDRESS IN VARIABLE TA$
10220  REM  RETURNS LISTEN ADDRESS IN VARIABLE LA$
10230  VTAB 7: HTAB 6: INVERSE : INPUT "  ENTER PRIMARY
   ADDRESS:";K$: NORMAL
10240 AD =  VAL (K$)
10250  IF AD < 1 OR AD > 30 THEN  HOME : VTAB 9: PRINT
   G$;G$;"  ADDRESS MUST BE BETWEEN 1 AND 30": FOR X = 1
   TO 500: NEXT X: GOTO 10230
10260 LA = AD + 32: REM  CALCULATE LISTEN ADDRESS
10270 LA$ = "WT" +  CHR$ (LA)
10280 TA = AD + 64: REM  CALCULATE TALK ADDRESS
10290 TA$ = "RD" +  CHR$ (TA)
10300  RETURN
10500  REM    ##### SUBROUTINE COMMUNICATES WITH BUS
   #####
10510  REM   DATA MUST BE IN DA$ BEFORE CALLING
10520  REM   LISTEN AND TALK ADDRESSES ARE IN LA$ AND TA$
10530 I = 1: REM  SET LOOP COUNTER TO NORMAL
10540  IF DA$ = "LKI" OR DA$ = "LKR" THEN I = 3: REM
   TAKE THIRD LEAKAGE READING
10550  PRINT LA$;Z$;DA$: REM  SEND LISTEN ADDRESS AND
   COMMAND
10560  FOR N = 1 TO I
10570  PRINT TA$;Z$;: REM     SEND TALK ADDRESS
10580  INPUT RZ$: REM  COLLECT READING IN RZ$
10590  NEXT N
10600  RETURN
```

Fig. 39 — Sample program using the Apple IIe as a controller with an Apple IEEE-488 controller card installed. To use the Apple IIe with a different control card change lines 10,000-10,600 accordingly.

```
10 !*************************************************************!
15 !                                                             !
20 ! This sample program is written for the Fluke 17XXA Instrument  !
25 ! controller. It illustrates the bus operation of the LC102 and  !
30 ! command syntax needed to automatically analyze a capacitors or !
35 ! inductors. Written by Sencore, this program may be used 'as is'!
40 ! or may be modified as needed by any LC102 owner without any    !
45 ! further permission from Sencore, Inc.                          !
50 !                                                             !
55 ! LC102 is at IEEE address 10                                  !
60 !*************************************************************!
100 DIM C(10),C$(12)
110 TIMEOUT 0
120 INIT
130 CL$=CHR$(27)+'[2J'
140 PRINT CPOS(0,0)+CL$
1000 ! *** Enter Capacitance Test Data ***
1010 PRINT CL$
1020 PRINT CPOS(5,30)+'1  Aluminum Lytic';
1030 PRINT CPOS(6,30)+'2  Double Layer Lytics';
1040 PRINT CPOS(7,30)+'3  Tantalum caps';
1050 PRINT CPOS(8,30)+'4  Ceramic caps';
1060 PRINT CPOS(9,30)+'5  All other caps';
1070 PRINT CPOS(11,30)+'Enter the capacitor type';\INPUT C(1)
1080 ! C(1)=capacitor type
1090 IF C(1)<>1 AND C(1)<>2 AND C(1)<>3 AND C(1)<>4 AND C(1)<>5 THEN 1010
1100 PRINT CL$+CPOS(8,0)+'Enter the capacitor working voltage';\INPUT C(2)
1110 ! C(2)=capacitor working voltage
1120 PRINT CL$+CPOS(8,0)+'Enter the capacitor value (.01uF)';
1130 INPUT C$(0)
1140 ! C$(0)=capacitor value
1150 PRINT CL$+CPOS(8,0)+'Enter the capacitor tolerance';\INPUT C(4)
1160 ! C(4)=capacitor tolerance
2000 ! *** LC102 Lead Zero ***
2010 LC$=CHR$(27)+'[2K'\C$(5)=LC$\C$(4)=LC$
2020 C$(2)=LC$\C$(3)=LC$
2030 PRINT @10,'CPO'
2040 PRINT CL$+CHR$(7)
2050 PRINT CPOS(8,22)+'Open then leads and touch the screen'
2060 WAIT FOR KEY\K%=KEY
2070 PRINT CL$+CHR$(7%)
2080 PRINT @10,'LDO'
2090 INPUT @10,Z$
3000 ! *** LC102 Test Data Set-up ***
3010 PRINT CL$+CHR$(7%)
3020 PRINT CPOS(8,10);
3030 PRINT 'Hook the leads to the capacitor to test and touch the screen'
3040 WAIT FOR KEY\K%=KEY
3050 PRINT CL$+CHR$(7%)
3060 T1$=MID('ALMDBLTANCERAOC',(C(1)*3%)-2%,3%)
3070 C$(6)=''
3080 FOR J%=1 TO LEN(C$(0))
3090  T2$=MID(C$(0),J%,1%)
3100  IF INSTR(1%,'upfUPF',T2$) THEN C$(6)=C$(6)+T2$
3110  IF INSTR(1%,'.0123456789',T2$) THEN C$(7)=C$(7)+T2$
3120 NEXT J%
3130 PRINT @10,T1$
3140 PRINT @10,C(2);'V'
3150 PRINT @10,VAL(C$(7));C$(6)
3160 PRINT @10,C(4);'+%'
3170 PRINT @10,C(4);'-%'
4000 ! *** Capacitor Value Test Routine ***
4010 PRINT @10,'CAP'
4020 INPUT @10,C$(1)
4030 IF MID(C$(1),15%,1%)='G' THEN C$(8)='Good' ELSE C$(8)='Bad'
4040 IF LEFT(C$(1),3)<>'ERR' THEN C$(1)=MID(C$(1),4%,11%)
4050 Z1$=MID(' FuFpF',(INT(VAL(RIGHT(C$(1),10%))/6%)*2%)+1%,2%)
5000 ! *** Capacitor Leakage Test Routine ***
5010 PRINT @10,'LKI'
5020 INPUT @10,C$(2)
5030 IF LEFT(C$(2),3%)='ERR' THEN C$(2)=CHR$(27)+'[2K'\GOTO 8010
5040 I%=INSTR(1%,C$(2),'-')
5050 IF I%<4% OR I%>10% THEN I%=3%
5060 C$(2)=NUM$(VAL(MID(C$(2),I%+1%,10%-I%)))
5070 PRINT @10,'LKR'
5080 INPUT @10,C$(3)
5090 C$(3)=NUM$(VAL(MID(C$(3),4%,7%)))
5100 IF VAL(C$(3))=8888 THEN C$(3)=CHR$(27)+'[5m8888'+CHR$(27)+'[m'
5110 IF C(1)=2 THEN 6060
6000 ! *** Capacitor Delectric Absorption Test Routine ***
6010 PRINT @10,'D/A'
6020 INPUT @10,C$(4)
6030 IF MID(C$(4),15%,1%)='G' THEN C$(11)='Good' ELSE C$(11)='Bad'
6040 IF LEFT(C$(4),3%)='ERR' THEN C$(4)=LC$\GOTO 6060
6050 C$(4)=NUM$(VAL(MID(C$(4),4%,7%)))
6060 IF C(1)>3 THEN 8010
7000 ! *** Capacitor ESR Test Routine ***
7010 PRINT @10,'ESR'
7020 INPUT @10,C$(5)
7030 IF MID(C$(5),15%,1%)='G' THEN C$(12)='Good' ELSE C$(12)='Bad'
7040 C$(5)=NUM$(VAL(MID(C$(5),4%,7%)))
8000 ! *** Display Results on Screen ***
8010 PRINT CL$
8020 PRINT @10,'CPO'
8030 PRINT CPOS(4,25)+'Value ---------------- ';VAL(LEFT(C$(1),7%));Z1$;
8040 PRINT CPOS(4,65)+C$(8)
8050 PRINT CPOS(5,25)+'Leakage (current) ----- ';C$(2);
8060 IF C$(2)<>LC$ THEN PRINT 'uA';CPOS(5,65);C$(9)
8070 !PRINT CPOS(5,65)+C$(9)
8080 PRINT CPOS(6,25)+'Leakage (resistance) -- ';C$(3);
8090 IF C$(3)<>LC$ THEN PRINT CHR$(24);!CPOS(6,65);C$(10)
8100 PRINT CPOS(7,25)+'Dielectric Absorption - ';C$(4);
8110 IF C$(4)<>LC$ THEN PRINT '%';CPOS(7,65);C$(11)
8120 PRINT CPOS(8,25)+'ESR ------------------ ';C$(5);
8130 IF C$(5)<>LC$ THEN PRINT CHR$(24);CPOS(8,65);C$(12)
8140 PRINT CPOS(14,25)+'Touch the screen to rerun the program'
8150 WAIT FOR KEY\K%=KEY
8160 PRINT CHR$(7%)
8170 GOTO 130
```

Fig. 40 — Sample program using a Fluke controller.

APPLICATIONS

Introduction

The procedures explained in the OPERATION section of this manual explain how to use the LC102 AUTO-Z. Once you become familiar with the basic operation of the AUTO-Z, you will discover many additional applications of the unit. This section will provide you with further information on using the LC102 features for extended capacitor and inductor tests, as well as other special applications.

Identifying Capacitor Types

Capacitors are often grouped according to the kind of dielectric that is used to separate the plates, and are named accordingly. For example, an aluminum electrolytic capacitor has an aluminum oxide dielectric. While a mylar capacitor uses mylar dielectric. (Refer to the APPENDIX for an explanation of dielectric and other capacitor theory).

Many different types of capacitors are used in electronics. Each type has certain properties that make it better suited for particular applications. Properties such as temperature coefficient, ESR, dielectric absorption, leakage, voltage break down, and frequency characteristics are taken into account when selecting the capacitor type to be used. When troubleshooting a circuit, it is not important to know why a certain type of capacitor was selected. It is best to simply replace a bad capacitor with a good capacitor of the same type value and voltage rating. This is especially true when the component is in a "Safety Critical" circuit. Because different capacitor types have different characteristics, it is important that you know what type of capacitor you are testing in order to know if the LC102 test results are acceptable or not.

Capacitors are divided into five different types for testing with the LC102. Each has different parameters which require different GOOD/BAD limits. These five capacitor types have different physical characteristics to determine an unknown capacitor type. These characteristics are explained in the following paragraphs and are summarized in figure 41.

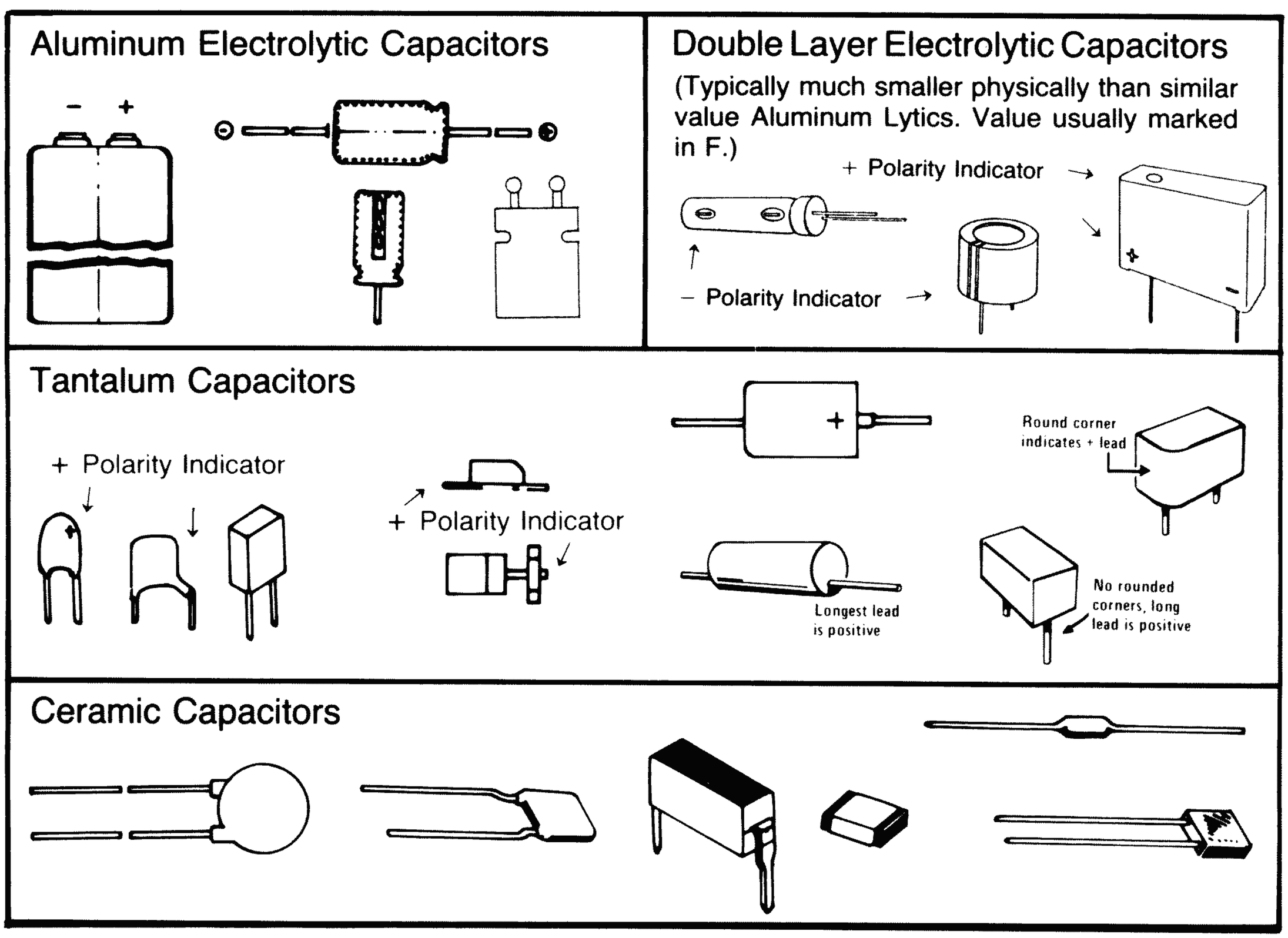

Fig. 41 — Each capacitor type may be identified by its unique physical characteristics.

Aluminum Electrolytics

Aluminum electrolytic capacitors (ALUMINUM LYTICS) are the easiest capacitor type to identify. They are most commonly cylinder shaped and have radial or axial leads. Large value aluminum lytics often have screw terminals or solder lugs. The case of an aluminum lytic usually is rolled in or formed out near the lead end to hold the end cap and seal. All aluminum lytics have a seal that is soft and rubber like to allow gasses to vent. Depending on the physical size of the case, the soft seal may make up the entire end of the case, or it may be just a small section of a hard end cap. Aluminum lytics have the largest physical size to capacity ratio of all capacitor types. These capacitors may also have several sections, with each section having a different capacitance value but sharing the same negative terminal, usually the case. This is unique to aluminum electrolytics, and whenever you encounter a capacitor having several different capacitance value sections, it will be an aluminum electrolytic.

Because of their unique physical characteristics, most aluminum lytics usually aren't easily confused with other capacitor types. Axial lead aluminum lytics, however, may possibly be mistaken for axial lead tantalum lytics. The lead weld, shown in figure 43, is an identifying characteristic of the tantalum in electrolytic and is a quick way to differentiate between an axial lead aluminum lytic and a tantalum lytic. Aluminum lytics do not have a lead weld on either terminal.

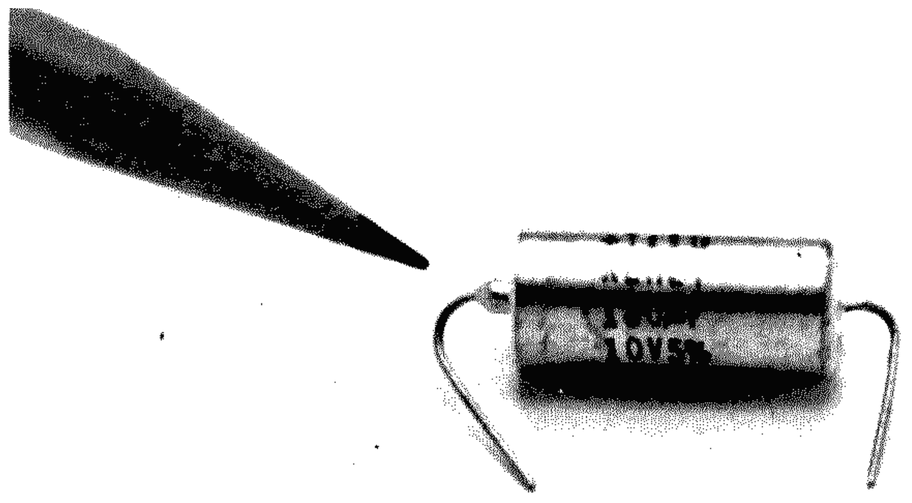

Fig. 43 — Axial lead tantalum capacitors, like the one shown here, are easily identified from axial lead aluminum electrolytics by a solder weld on one end.

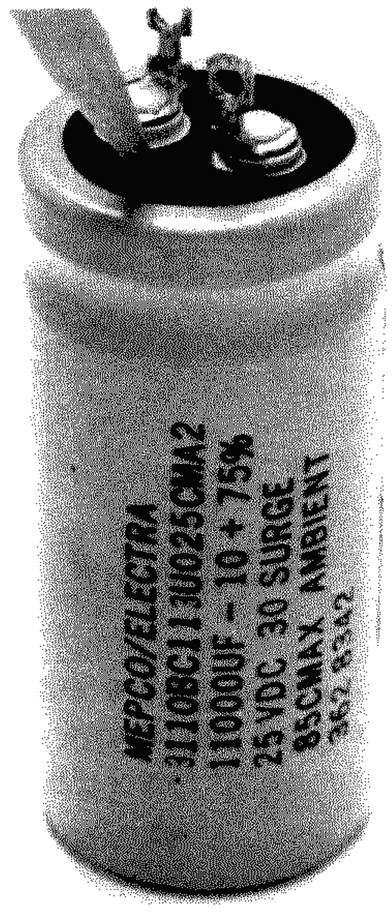

Fig. 42 — All aluminum electrolytics have a rubber seal.

Tantalum Electrolytics

Dipped tantalum electrolytics are replacing aluminum lytics in many electronic circuits. They have less leakage and higher value tolerances than aluminum lytics. Tantalum electrolytic capacitors are about one half the size of a similar aluminum electrolytic of the same value and voltage rating.

The most common shapes of tantalum capacitors are illustrated in figure 44. While they may have many shapes, tantalum capacitors always have polarized leads. Lead polarization is often the only way to distinguish a tantalum lytic from another type of capacitor. Once you become familiar with the polarity markings used, tantalum lytics are not difficult to identify. The polarity markings are not meant to be difficult to notice or understand, although if you are not aware of them, they might be overlooked. Pay careful attention so that you do not overlook the polarity indication and misidentify a tantalum capacitor as another type.

The simplest and most common polarity indicator is a "+" sign near one of the leads. This is often used along with a second type of indicator. Figure 44 shows several examples of lead identification used in tantalum capacitors. In addition to the "+" sign, each capacitor shown has a second indication of the "+" lead: a lead weld, a tapered case, a rounded corner, a line, or an extra ridge near the "+" lead.

A "+" indicator is not printed on all tantalum capacitors. In many cases the polarity indicator will simply be the lead weld, a tapered case or rounded corner, a line, or an extra ridge on the case. Several other polarity identifiers are also used. The end or side nearest the plus lead may be painted one color. Also at times, just a dot or a line on the side of the package will be used.

NOTE: Tantalum capacitors may use dots or stripes to indicate value or tolerance. Do not confuse the value color code for the polarity indicator of a tantalum capacitor. The polarity indicator will be larger and isolated from the color code.

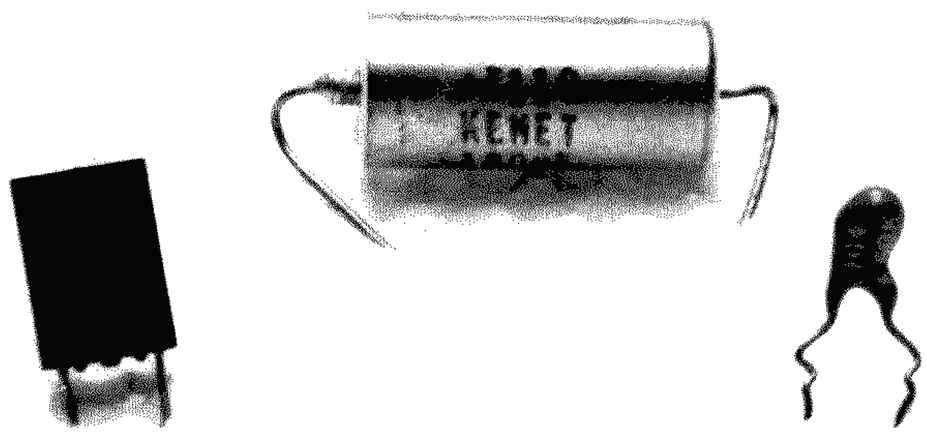

Fig. 44 — Tantalum electrolytic capacitors always have a polarity indicator.

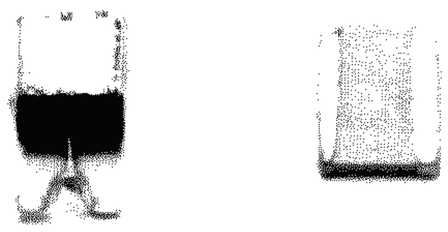

Fig. 45 — A tantalum chip capacitor (left) can be identified from a ceramic chip capacitor by its positive lead.

Tantalum capacitors are also available in the small surface mount or "chip" type. Tantalum chip caps could be confused with the ceramic chip cap, since they are similar in size and appearance at first glance. But as figure 45 shows, a tantalum chip capacitor is polarized and has an easily identifiable positive lead. The polarity identification that may give you the most difficulty in identifying a tantalum capacitor is lead length. The only identification of the positive lead on some tantalum capacitors is that it is longer than the other lead. Of course, this presents no problem when the capacitor is new, but once it has been installed into a circuit board, the leads are cut off to the same length. In this situation, use the circuit as the clue to the cap's type and polarity.

Double Layer Electrolytics

Double layer electrolytic capacitors are commonly known by trade names such as "Supercap" or "Gold Cap". These capacitors are quite easy to identify. Double layer lytics have an extremely large capacitance value for their physical size. They are found in various physical shapes and sizes, as shown in figure 46. Their value is marked in Farads, rather than in picofarads or microfarads.

The polarity of a double layer lytic is often printed on the case, although a longer lead may also be used to identify the positive terminal. Some double layer lytics use a line next to one lead which may be either "+" or "-". If there is no other marking, the terminal that is part of the metal case is the negative lead.

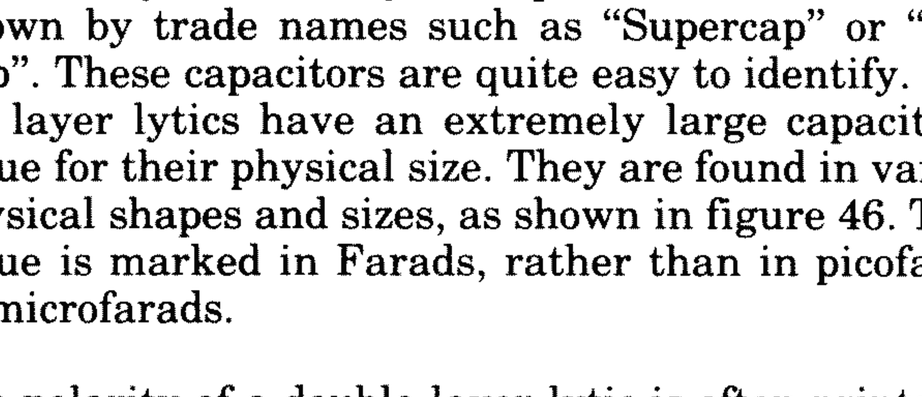

Fig. 46 — Double layer lytic capacitors have a very large amount of capacitance for their physical size. Their value is usually marked in Farads.

Ceramic Capacitors

Ceramic capacitors may be found in many different sizes and shapes. The most common type of ceramic capacitor is the flat, round ceramic disc, as shown in figure 47. The ceramic disc is unique in its shape, and is easily identifiable from other ceramics, and other types of capacitors. The ceramic disc is also unique from other types of ceramic capacitors in that it may have small amounts of normal leakage.

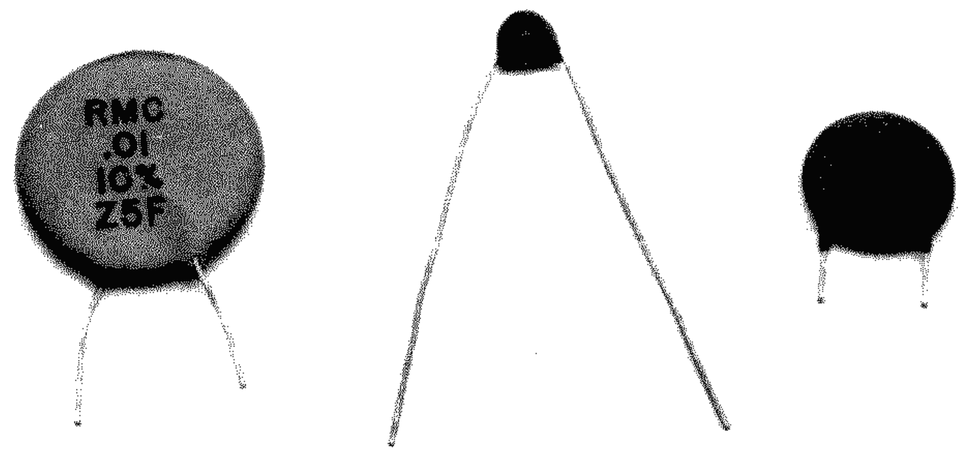

Fig. 47 — The most common type of ceramic capacitor is the ceramic disc. It has unique parameters which require it to be tested differently than other ceramic, or film capacitors.

Two other kinds of ceramic capacitors which are easily identified from other capacitor types are the axial lead and chip types. As figure 48 shows, some axial lead ceramic capacitors may look the same as resistors and inductors which also use the same case type. You can easily determine if the component is a resistor, capacitor or inductor from its location in the circuit. The LC102 can also be used to help identify these unknown components, as explained in a following section, "Identifying Unknown Components" (page 48).

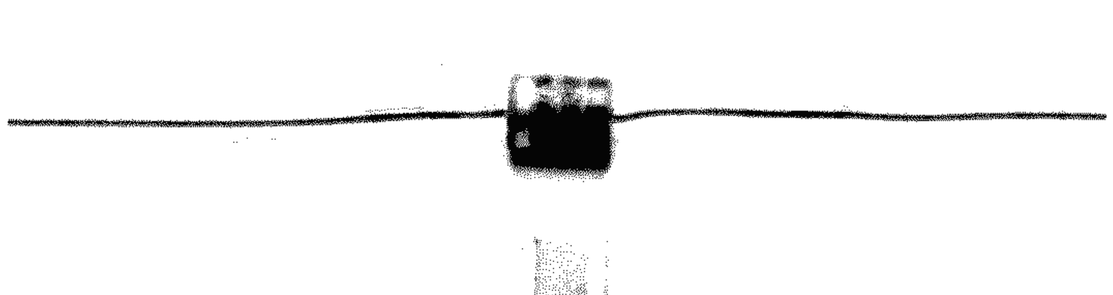

Fig. 48 — Ceramic capacitors may also include an axial lead and chip-type package. Axial lead ceramics often look like other axial lead components.

Ceramic chip capacitors are unique in appearance, as shown in figure 45. Tantalum chip capacitors have a polarity indicator, ceramic chip capacitors do not.

There are a few other kinds of ceramic capacitors besides the three types identified here. These types, such as molded ceramics and encapsulated ceramics, are very similar in appearance to film capacitors, and are difficult to differentiate from films by physical appearance. This presents no problem though, when testing these ceramics with the LC102, since any leakage or D/A in a ceramic capacitor, other than a ceramic disc, is not allowable. If you are unable to identify the capacitor as a ceramic, test it as an "ALL OTHER CAPS" type.

All Other Capacitors

The final capacitor type grouping for LC102 AUTO-Z GOOD/BAD testing is "ALL OTHER CAPACITORS". As its name implies, capacitors in this category do not have the electrical (or physical) characteristics to fit into any of the other categories. Capacitors included in this grouping are films, micas, air dielectrics, papers, oil filled capacitors, and other similar types. (There are numerous types of film capacitors such as mylar, polyester, polycarbonate, polystyrene, and polypropylene). Though each of these capacitor types have different dielectrics and somewhat different parameters, they are all similar in that when tested with the LC102, they should have no dielectric absorption or leakage. Also, because of their relatively low capacitance value, ESR is of little importance and is not measurable. If you measure any leakage, or D/A in an "ALL OTHER CAPACITOR" type it is bad.

NOTE: When replacing any of these capacitors, always replace it with the same type originally used in the circuit. For example, a mylar film capacitor should only be replaced with another mylar film. This is especially important for components in areas of the schematic designated as "Safety Critical".

Identifying Inductor Types

Inductors, like capacitors, may be found in many shapes and sizes depending on the application in which they are used. The LC102 will provide an accurate Ringer test on all types of air core and ferrite core inductors, provided the proper Inductor COMPONENT TYPE switch is selected. Each inductor type has a normal range of impedance, and the Inductor COMPONENT TYPE switches match the impedance of the LC102 Ringer circuits to the particular inductor type being tested. With the proper COMPONENT TYPE switch selected, an inductor with just a single shorted turn will produce a "BAD" indication in the Ringer test.

Air and ferrite core inductors break into three, easy to identify types: Yokes and Flybacks, Switching Transformers, and Coils. Select one of these three Inductor COMPONENT TYPE switches when performing the Ringer test.

Yokes and Flybacks

Yokes are used exclusively in video applications to deflect a CRT election beam. As shown in figure 49, they can not be easily mistaken for any other type of inductor. Yokes have a ferrite core, surrounded by two pairs of windings, which fits over the CRT neck. It is held in place with a plastic shell attached to the CRT neck.

Flyback transformers are also easy to identify. They too are used exclusively in video applications, and produce high voltage for the CRT. A flyback has several terminals which are often soldered to a PC board chassis. One or two heavily insulated leads exit the flyback to carry high voltage to a tripler, or to the CRT directly.

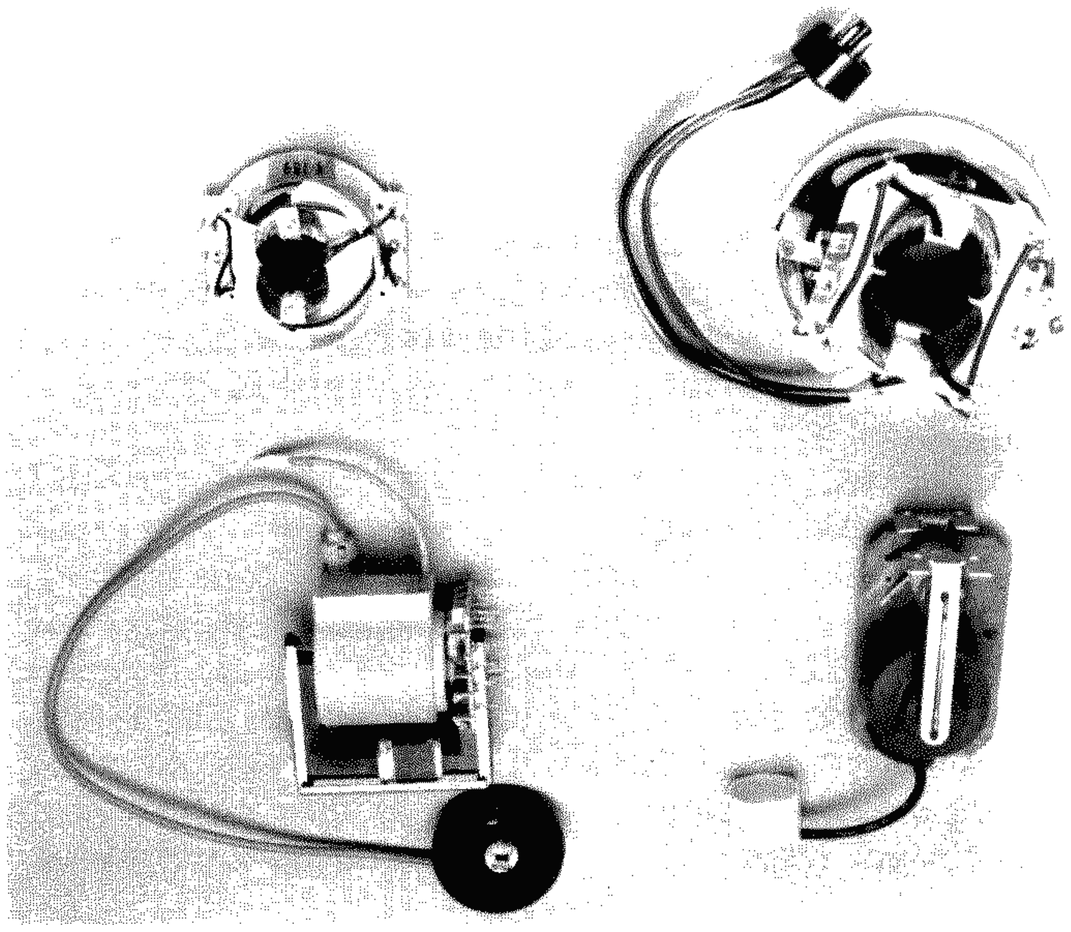

Fig. 49 — Yokes (top) and flybacks (bottom) are inductor types which are easily identified.

Switching Transformers

Switching transformers are used in power supply circuits to step voltages up or down. However, they are much different from conventional power transformers in both appearance and operation, and should not be mistaken for a power transformer. Power transformers usually operate at 60 Hz, and therefore contain a laminated iron core which is often visible. Because the iron core is low Q and absorbs all ringing energy, power transformers cannot be tested with the LC102.

Switching transformers, on the other hand, are much smaller and lighter than power transformers. They are wound around a ferrite core which easily rings when good. Switching transformers operate at much lower currents and much higher frequencies than power transformers. Two common switching transformers, PC board mount and toroid types, are shown in figure 50.

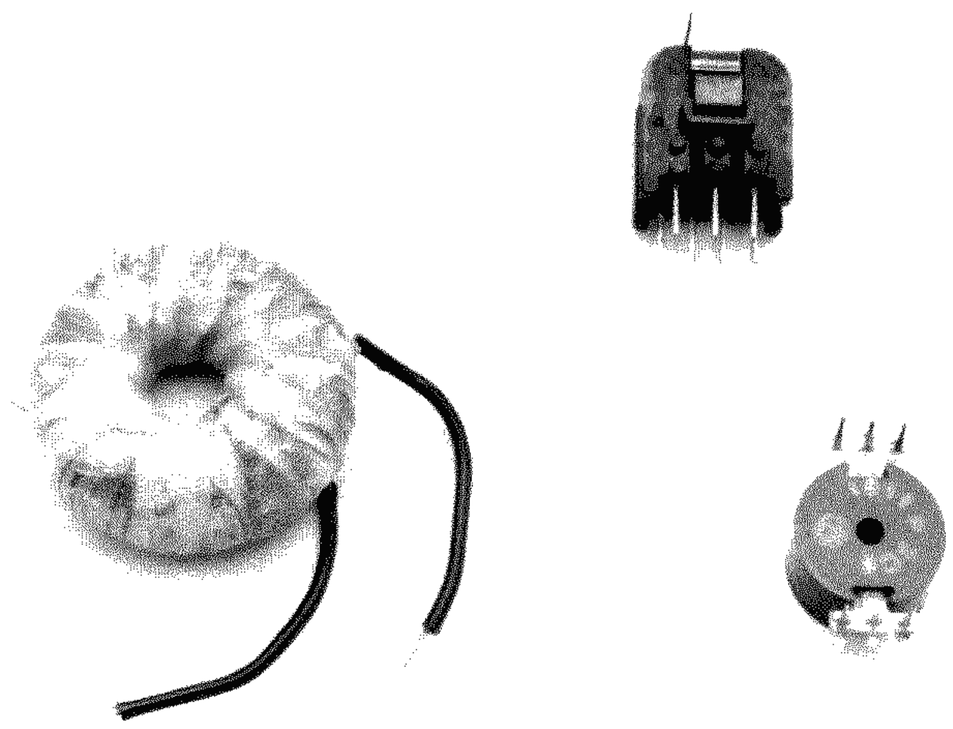

Fig. 50 — The torriod (left) and PC mount are two common types of switching transformers.

Coils

All non-iron core inductors which can not be classified as yokes, flybacks, or switching transformers are tested with the "COILS" INDUCTOR COMPONENT TYPE switch selected. These include RF/IF transformers, RF chokes, postage stamp inductors, axial lead inductors, free form coils, as well as some other types.

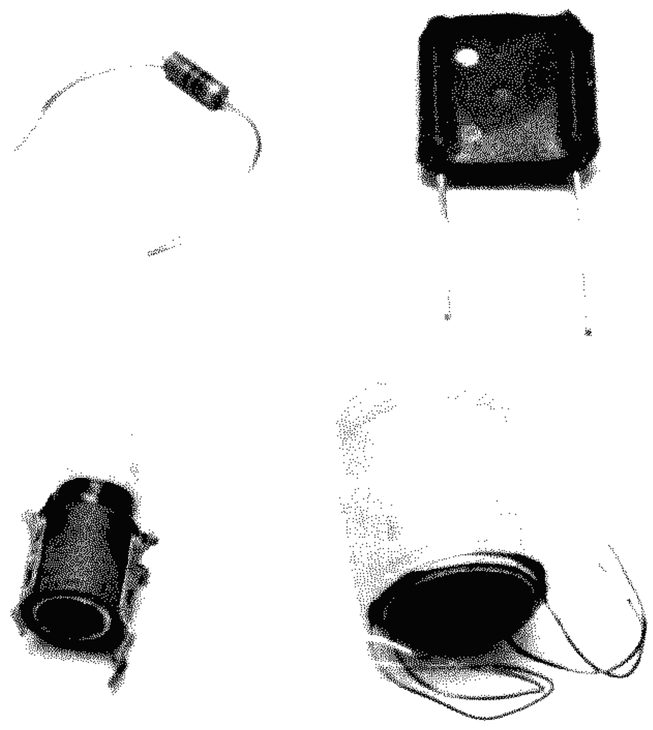

Fig. 51 - Air and ferrite core inductors are tested with the "COIL" component type switch selected.

Identifying Unknown Components

Occasionally you may encounter small value inductors and axial lead ceramic capacitors which look like the more common axial lead film resistor. If these components get mixed up in your parts bin, you may have difficulty identifying the component. This may also be a concern with chip capacitors, chip inductors, and a few other axial lead inductors and capacitors on which the markings are difficult to interpret or are not visible.

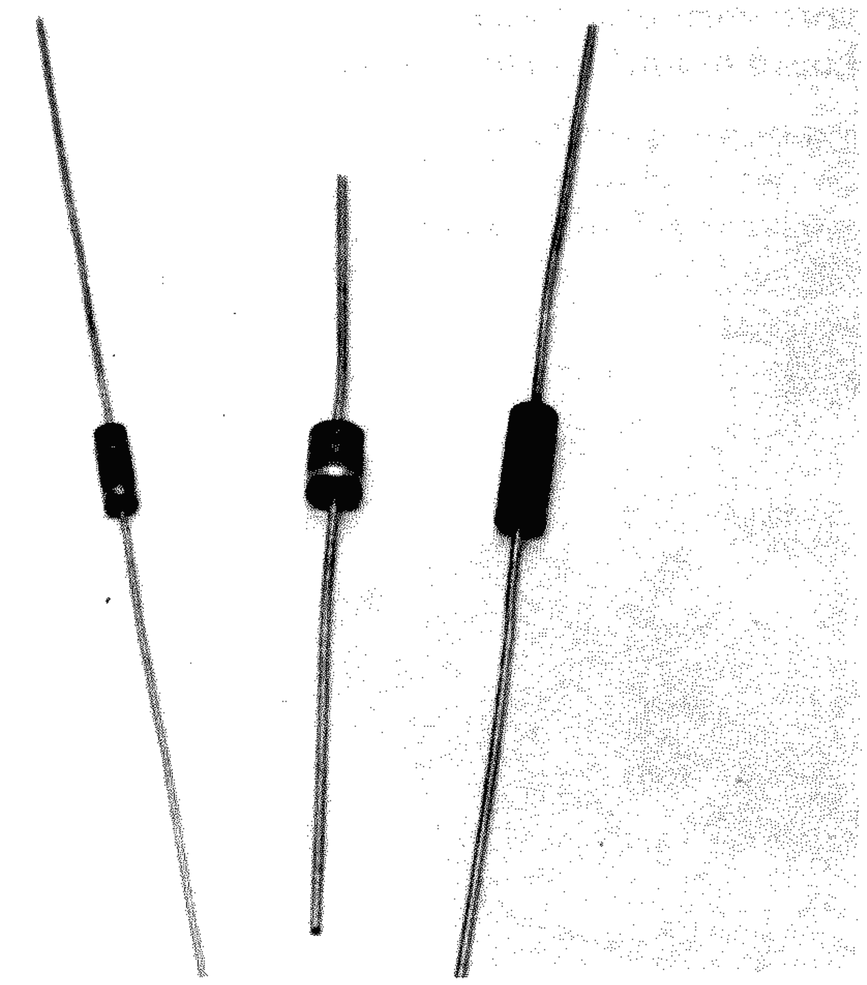

Fig. 52 - Some small value inductors (left) capacitors (center), and resistors (right) may be hard to tell apart. The LC102 provides a quick test to identify such unknown components.

You can use the LC102 tests to sort these component types from each other. Figure 53 shows, in flow chart form, the procedure you need to follow. Before beginning the test, zero the test leads in both the "SHORT" and "OPEN" position of the LEAD ZERO switch. You begin identifying the component with a capacitor value test. Depending on the reading, you either use the leakage test or inductor value test to further isolate the component. Finally, if the component appears to be an inductor, you use the ringing test as confirmation.

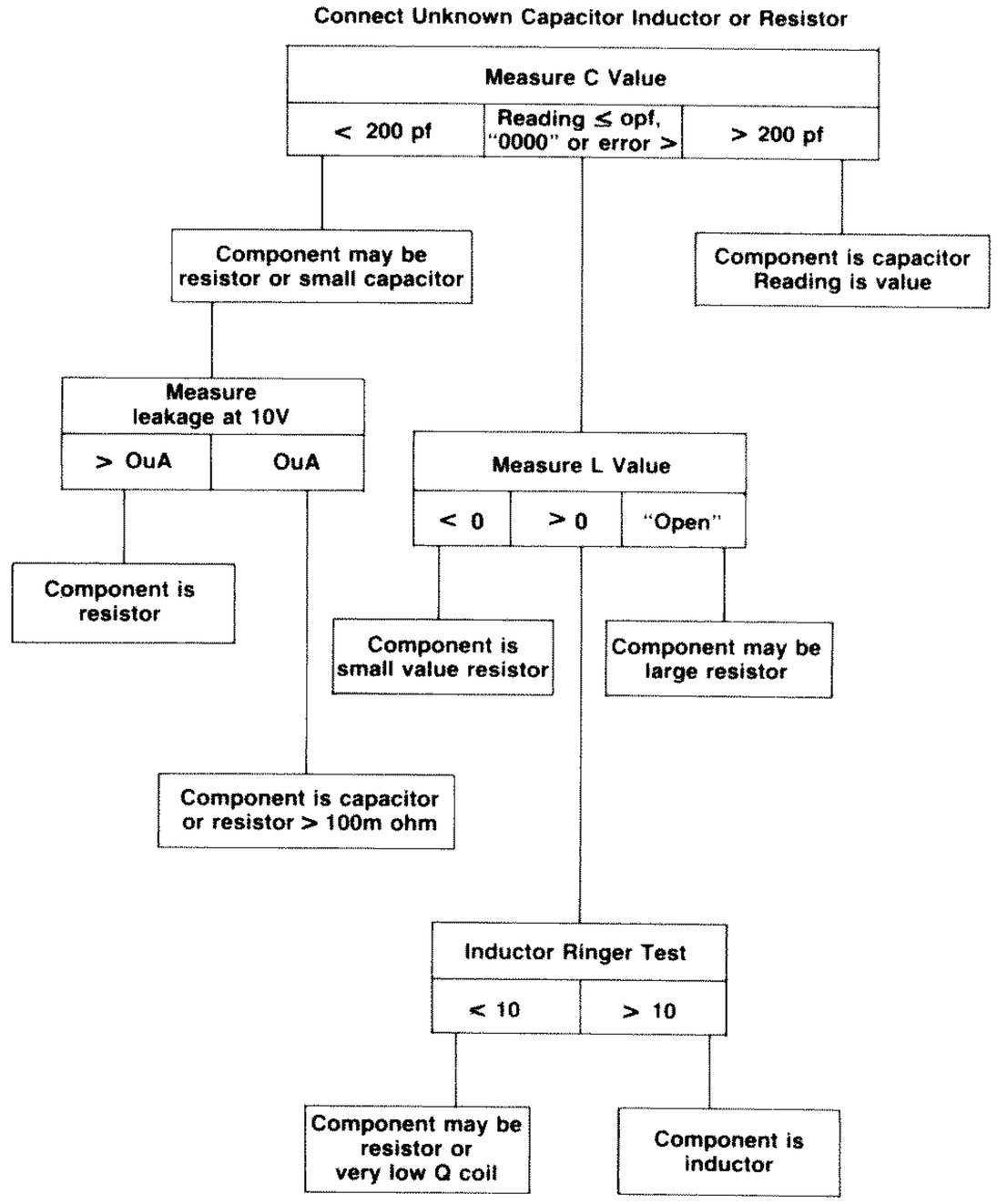

Fig. 53 — Use this flow chart to help identify small axial lead inductors, capacitors, and resistors from one another.

IMPORTANT

Do not apply more than 10 volts across an unknown capacitor resistor or inductor. Most chip, "film" package, and axial lead inductors and capacitors will have voltage ratings greater than 10 volts. If in doubt about an unknown component's voltage rating, use another method to identify it, if possible, or use a lower test voltage.

NOTE: This test is only intended to help you sort inductors, capacitors and resistors in "film resistor" type, chip type or small axial lead packages which are difficult to identify by physical appearance or any other means.

Capacitor Testing Applications

Interpreting Capacitor Value Readings

The LC102 AUTO-Z automatically displays the three most common capacitor values of picofarads (pF), microfarads (uF), and Farads (F). When measuring capacitors with the LC102, you may encounter some capacitors with a value marked without a decimal, such as "25000 pF", but that read ".0250 uF" on the LC102 display. You may also encounter, as an example, a capacitor which is marked "3300 pF" by some manufacturers, yet an identical replacement is marked ".0033 uF" by another manufacturer.

As these examples illustrate, capacitors can be marked in pF, uF or even F. A fourth value multiplier, the nanofarad (nF) is seldom used to mark a capacitor, but is used occasionally in design and industry. Table 12 will help you to easily convert from one reading to another.

Checking Leakage Between Sections Of A Multi-Section Lytic

Multiple section aluminum electrolytic capacitors are common, especially in many older power supplies. Such capacitors are actually several capacitors inside one can sharing the same negative terminal.

Leakage sometimes develops between one or two sections of multi-section lytics. This leakage is especially difficult to troubleshoot without the LC102 leakage test because signals from one section of the capacitor are coupled to another section. This results in multiple symptoms in the operation of the device in which the capacitor is used. An ohmmeter will not show leakage between sections of a multi-layer cap because the leakage only occurs near the capacitor's operating voltage.

To isolate this type of leakage with the LC102 you simply perform the standard leakage test. As you test each section, short each of the remaining sections to ground. Any increase in leakage when a section is shorted to ground indicates leakage between sections.

Change to From	Farads	Microfarads	Nanofarads	Picofarads
Farads		move decimal 6 places right	move decimal 9 places right	move decimal 12 places to right
Microfarads	move decimal 6 places left		move decimal 3 places right	move decimal 6 places right
Nanofarads	move decimal 9 places left	move decimal 3 places left		move decimal 3 places right
Picofarads	move decimal 12 places left	move decimal 6 places left	move decimal 3 places left	

Table 12 — Capacitor value conversion chart.

Dielectric Stress

Many ceramic capacitors change value when they are DC biased. The applied DC voltage causes physical stress within the ceramic dielectric causing it to decrease in value. This value change is called "dielectric stress". Normally a ceramic capacitor will return to its normal value within several seconds after the voltage is removed.

You will not normally notice dielectric stress when checking a ceramic capacitor with the AUTO-Z, unless you apply a voltage to it with the capacitor leakage test. Then you may find that the capacitance value has decreased by as much as 50% in ceramic capacitors having values 10 pF or smaller. This is a normal characteristic of small value ceramics.

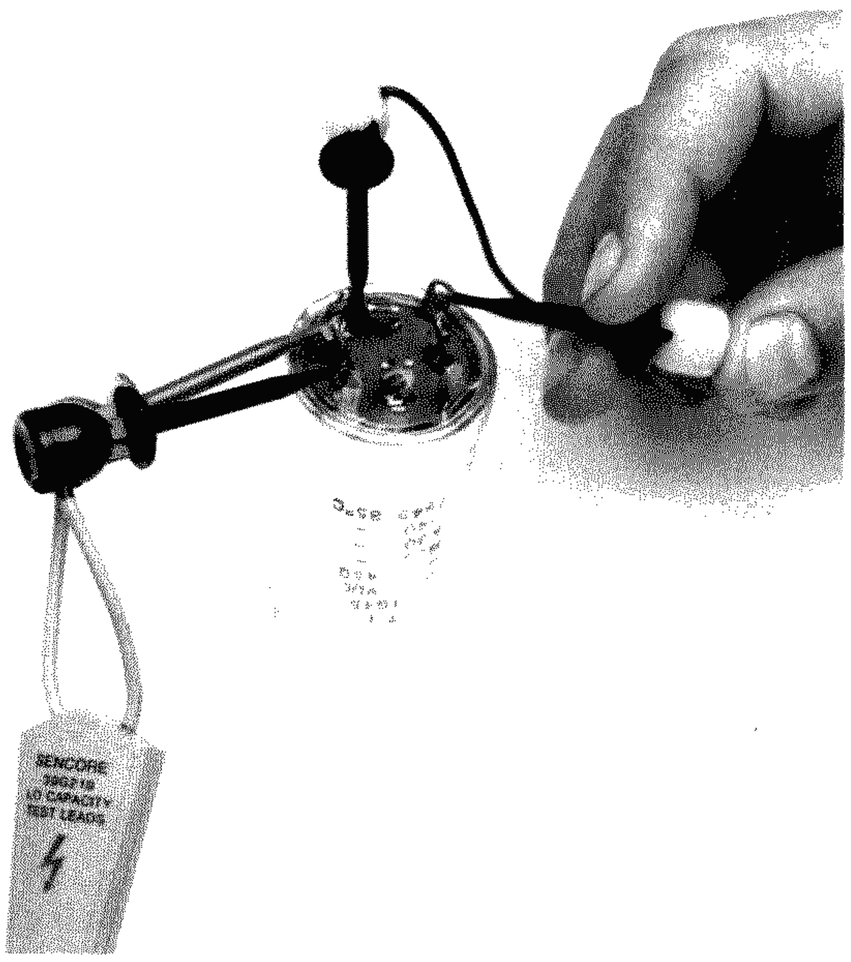

Fig. 54 — Test the leakage of one section of a multi-section lytic, then short one of the remaining sections to ground. Any increase in leakage current indicates leakage between that section and ground.

WARNING

This test should only be performed by a person who understands the shock hazard of up to 1000 volts applied to the test leads during the capacitor leakage test. DO NOT hold the capacitor in your hand, or touch the test leads or capacitor leads when making this leakage test.

To check for leakage between sections of a multi-layer cap:

1. Connect one section of the capacitor to the LC102 test leads. Be sure to observe proper polarity.

2. Enter the working voltage of the section being tested. Note that a multi-layer lytic may have a different working voltage for each section.

3. Depress the CAPACITOR LEAKAGE button and read the leakage current on the LCD display. It must be within the maximum allowable leakage limits for its value and voltage rating.

4. Connect one end of a short jumper to the common terminal of the capacitor.

5. While depressing the CAPACITOR LEAKAGE button, connect the other end of the jumper to each of the capacitor terminals not already connected to the LC102 test leads.

6. A good multi-section electrolytic will show no increase in the leakage reading as the jumper is connected to each terminal.

Intermittent Capacitors

Occasionally an electrolytic capacitor may become intermittent. A poor weld of the lead to the internal foil plates or other mechanical problem can cause the capacitor to function randomly. Often such capacitors will also exhibit high ESR when they are working. (The internal construction of an electrolytic capacitor is shown in the APPENDIX).

If you suspect an intermittent capacitor, move its leads around and pull on them as you perform a capacitor value test. A change in capacitance indicates an intermittent component which should be replaced.

Checking Ceramic Capacitor Temperature Characteristics

Ceramic capacitors are designed to have a wide range of capacitance value and temperature characteristics, (More details are given in the APPENDIX.) Replacing a capacitor with one that has the same characteristics is especially important in certain oscillators and other temperature critical circuits. You can quickly determine the basic temperature characteristics of a ceramic using the LC102 and a heat source, such as a heat gun.

Simply connect the capacitor to the LC102 and measure its value. Then apply heat to the capacitor while you continue to measure its value. A COG or NPO type capacitor will not change in value, or change very slightly as heat is applied. An N type ceramic will decrease in value, while a P type ceramic will increase in capacitance.

Checking Capacitance Of Silicon Diodes and Transistors

The capacitance of silicon diodes and transistors, as well as the reverse leakage paths of silicon and germanium transistors can be easily measured using the LC102. Figure 55 shows the connections necessary for these measurements. If the LC102 display shows "0.0 pF" when testing capacitance, or flashing "88.88 mA" when testing leakage, the connections are reversed. No special precautions are necessary when measuring capacitance, however be sure to follow these precautions when testing leakage:

1. Do not apply more than 3 volts to a transistor when testing IBEO.

2. Set the leakage supply to the maximum voltage rating of the transistor when testing ICBO or ICEO, but do not exceed the rated voltage. Exceeding the rated voltage may cause the transistor to zener, and will damage the junctions.

NOTE: The capacitance of germanium transistors and diodes can not be measured with the LC102 because of their high leakage. Leakage tests of germanium devices are the same as for silicon devices.

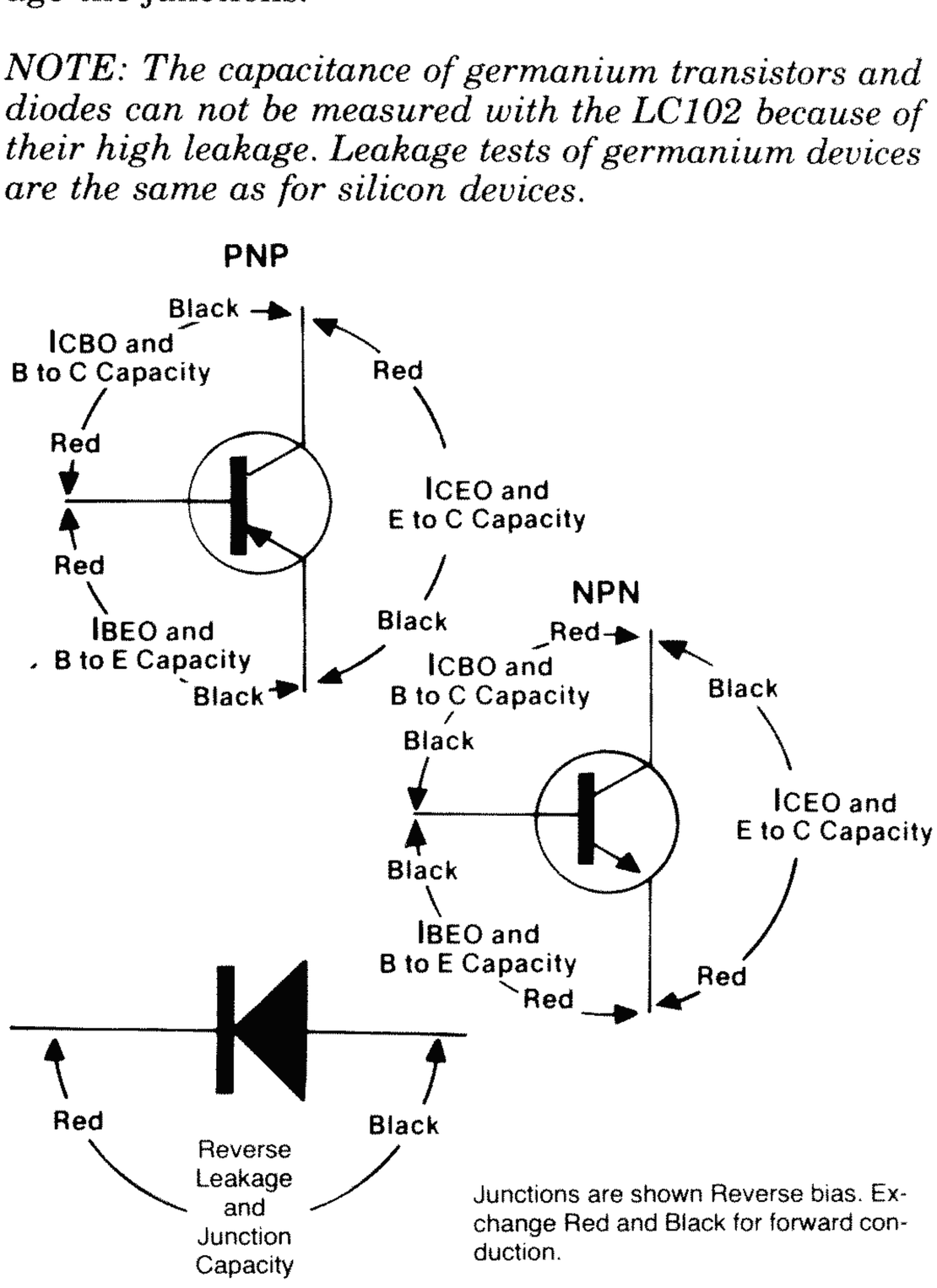

Fig. 55 — The connection for measuring the capacitance of silicon junctions and leakage paths for silicon and germanium junctions.

Testing High Voltage Diodes

High voltage diodes, such as those found in video high voltage and focus voltage sections may require up to 200 volts before they are forward biased and begin to conduct. They cannot be tested with an ohmmeter since, with only a few volts applied, a good high voltage diode will simply indicate open no matter how the ohmmeter is connected.

The capacitor leakage test of the LC102 provides sufficient voltage to bias high voltage diodes into conduction and also to test them for reverse breakdown. Test the diode for normal forward conduction first. Then reverse the test leads and check for reverse leakage.

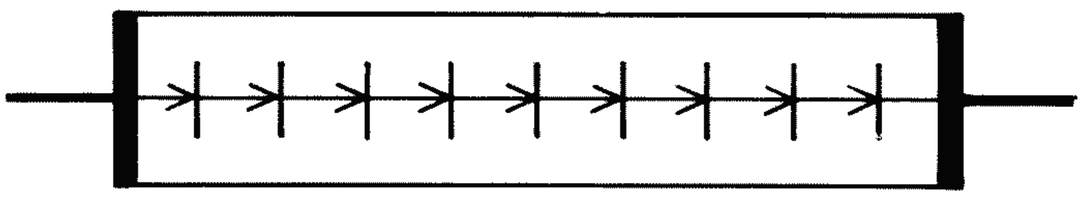

Fig. 56 — To test a high voltage diode, enough voltage is needed to forward bias all the junctions.

WARNING

This test should only be performed by a person who understands the shock hazard of up to 1000 volts applied to the test leads when the CAPACITOR LEAKAGE TEST button is depressed. DO NOT hold the diode in your hand, or touch the test leads or diode leads when making this test.

To test a high voltage diode:

1. Connect the red test lead to the diode anode ("-" end) and the black test lead to the diode's cathode ("+" end).

2. Enter 50 volts into the leakage supply and depress the CAPACITOR LEAKAGE test button.

3. If the LC102 display shows no leakage, apply more voltage until the diode begins to conduct, as indicated by a leakage current reading of 100 uA or greater.

4. Once the diode begins to conduct, do not apply any higher voltage as this will cause excessive current flow through the diode and damage it.

5. If you apply 999.9 volts to the diode and it still shows no conduction, it is open and you do not need to continue the test.

6. When the diode begins to conduct, release the CAPACITOR LEAKAGE button and reverse the test lead connection to the diode.

7. Set the leakage power supply to the PIV (peak inverse voltage) of the diode shown in a replacement guide. If the PIV is greater than 1000 V (as it will be for most diodes) set the leakage power supply to 999.9 volts.)

8. Depress the CAPACITOR LEAKAGE button and read the leakage current. A good high voltage diode will typically show less than 2 uA of reverse current.

Reforming Electrolytics

Aluminum electrolytic capacitors often decrease in value and develop leakage if they sit unused for long periods of time. (This is often the case with electrolytics on stockroom shelves or in parts bins). These symptoms are caused by the loss of some of the oxide dielectric. The oxide is formed by a chemical reaction in the electrolyte when voltage is applied to the plates. With time, this oxide deteriorates. In many cases the electrolyte has not dried up and the oxide coating can be reformed by applying a DC voltage to the capacitor for a period of time.

You can use the LC102 leakage test power supply to reform the dielectric. Reforming may take an hour or longer before the capacitor reforms and the leakage drops to a normal amount.

Use the 39G201 TEST BUTTON HOLD DOWN ROD supplied with the LC102 to hold the CAPACITOR LEAKAGE button depressed while you are reforming the capacitor. The hold down rod fits between the CAPACITOR LEAKAGE test button and the carrying handle, and can be adjusted longer or shorter as needed. A hold down rod rather than a locking button is used as a reminder to you and others that voltage is being applied to the test leads.

WARNING

Use the 39G201 Test Hold Down Rod with extreme caution. Do not touch the test leads or the capacitor leads while the Test Hold Down Rod is being used. Voltage up to 1000 volts is present when the CAPACITOR LEAKAGE TEST button is depressed. Make sure that the capacitor being reformed will not touch or come in contact with any metal object while voltage is applied to it.

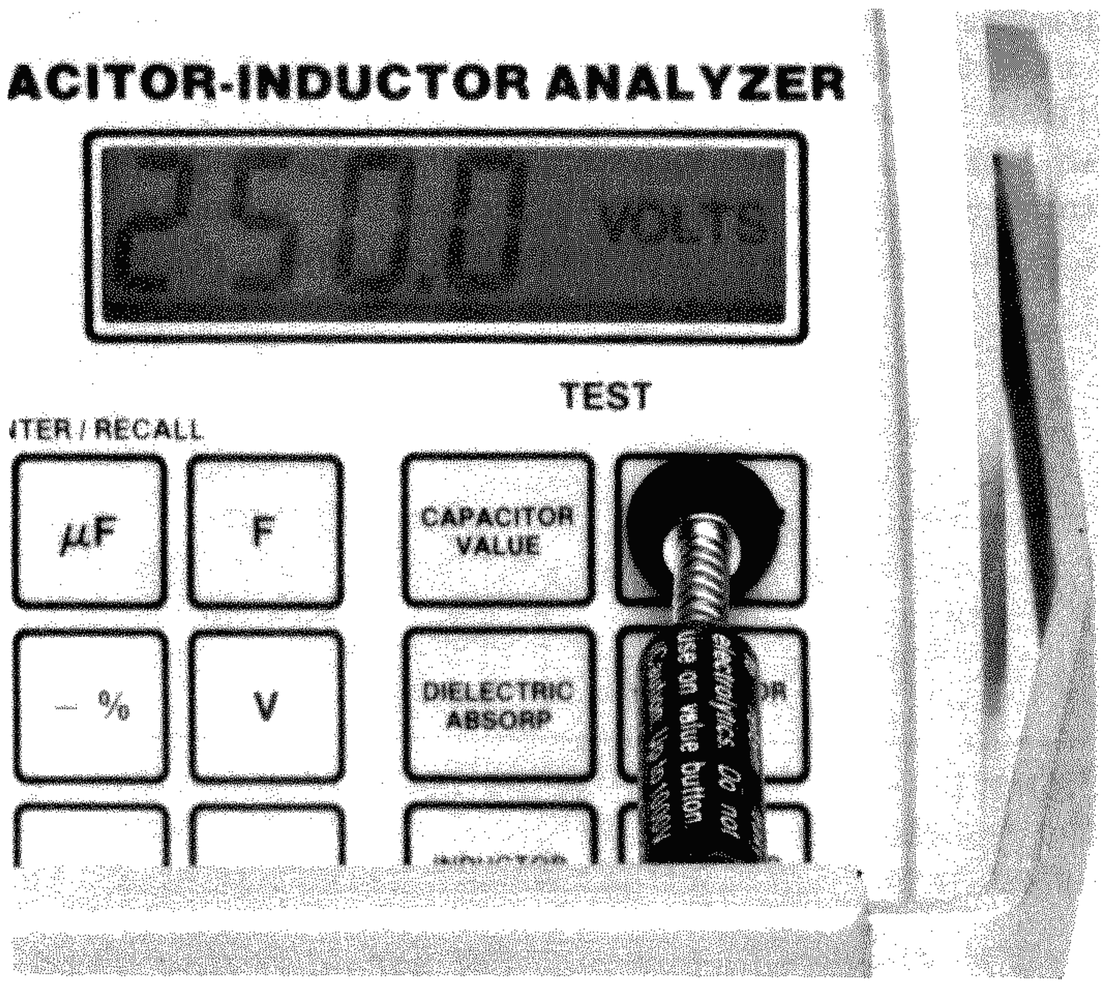

Fig. 57 - The TEST BUTTON HOLD DOWN ROD keeps the CAPACITOR LEAKAGE button depressed when reforming capacitors.

To reform an electrolytic:

1. Connect the capacitor to be reformed to the test leads.

2. Enter the rated voltage of the capacitor into the LC102.

3. Depress the CAPACITOR LEAKAGE button, and while holding it in, place the 39G201 TEST BUTTON HOLD DOWN ROD between the button and the handle.

4. Adjust the length of the rod by holding one end and turning the other until the hold down rod keeps the CAPACITOR LEAKAGE button depressed.

5. After the capacitor has reformed for at least one hour and the leakage has dropped to a normal amount, allow it to set for 30 minutes. Then recheck the value and leakage to see if reforming has improved the capacitor.

WARNING

NEVER use the TEST BUTTON HOLD DOWN ROD to hold in any button except the CAPACITOR LEAKAGE button. Damage to the LC102 may result if it is used to latch another button since the protection circuits inside the LC102 are bypassed when a test button is depressed. The warranty will be voided if the LC102 is damaged by connecting a charged capacitor or any other voltage to it with any of the other buttons held in with the TEST BUTTON HOLD DOWN ROD.

Inductor Testing Applications

Testing Inductors In-Circuit

The LC102 AUTO-Z can be used to measure the inductance of a coil with the component still in circuit. In-circuit inductance measurements, however, may be affected by the impedance of the circuit. Low values of parallel resistance will lower the circuit impedance and cause the LC102 to measure a lower inductance value. Table 13 lists the amount of parallel resistance which will cause a 10% or less change in the measured inductance. Resistances larger than the amounts shown will not have a significant effect on the inductance test.

Inductor	Value Minimum Parallel Resistance
1 uH to 18 uH	10 to 100 ohms
18 uH to 180 uH	25 to 200 ohms
180 uH to 1.8 mH	50 to 500 ohms
1.8 mH to 18 mH	150 ohms to 1.3 k ohms
18 mH to 180 mH	400 ohms to 3 k ohms
180 mH to 1.8 H	800 ohms to 7 k ohms
1.8 H to 20 H	5k to 25 k ohms

Table 13 — Inductors may be measured in-circuit if the parallel resistance is greater than the amounts listed here.

NOTE: Good inductors may not normally ring if connected in-circuit, unless the paralleled impedance is quite high. However, if an inductor does ring in-circuit, it is good.

Often an inductor mounted in-circuit has leads which are too short to attach the test lead clips to. The (optional) 39G85 TOUCH TEST PROBE is especially useful for measuring such coils. It provides 2 needle-sharp points which will pierce through the coating on the foils allowing contact to the coils leads.

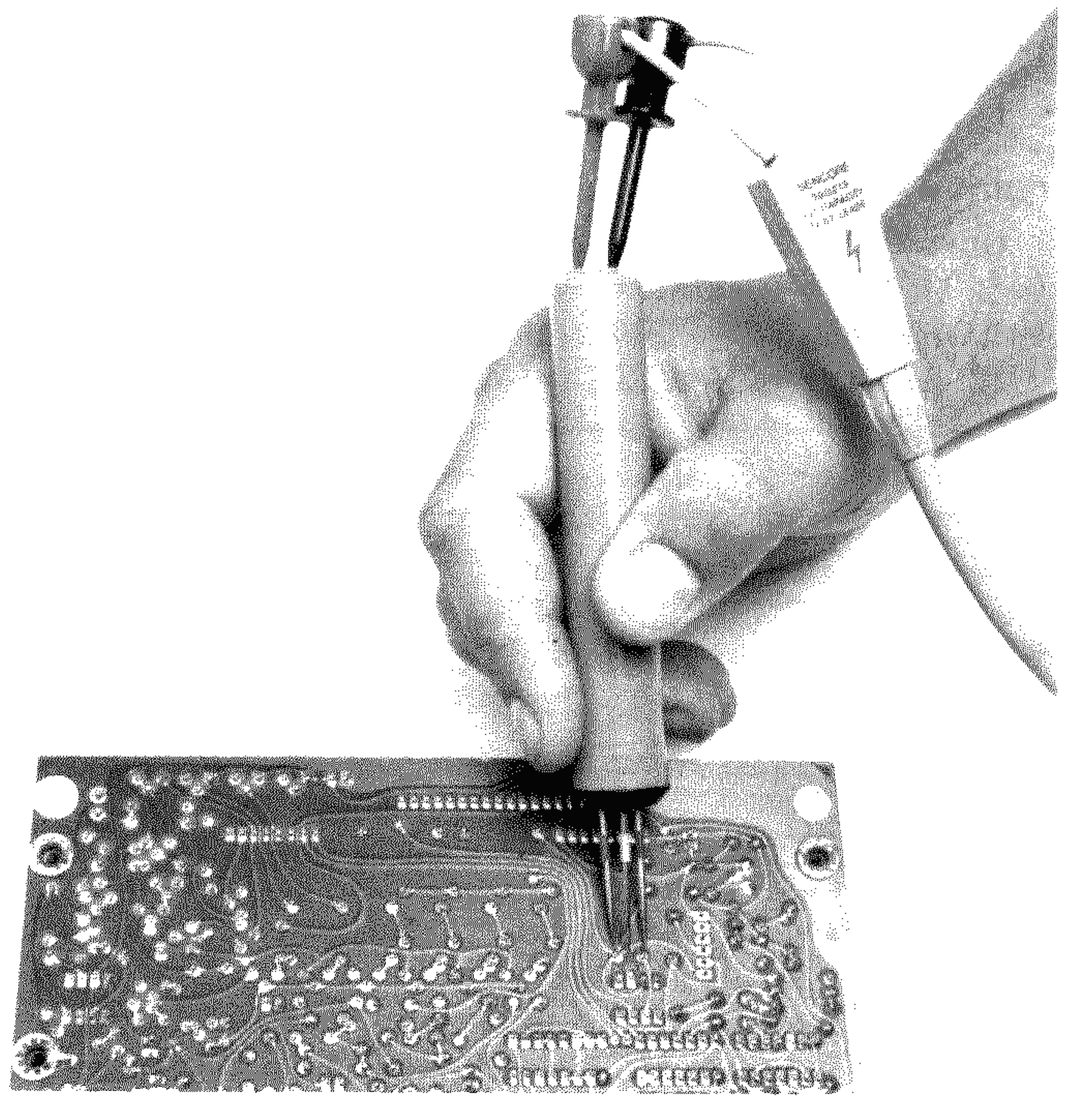

Fig. 58 — Use the optional touch test probe to measure inductors mounted on PC boards.

Mutual Inductance

Mutual inductance occurs when two or more coils are wound on the same form and connected together. In such cases, the total inductance measured across the windings will not equal the sum of the measured inductances of the individual coils. This is due to the mutual inductance of the coils. The total measured value may be higher or lower than the individual inductances, depending on whether the coils are aiding or opposing. In addition, the effects of mutual inductance depend on the type of core material, the spacing of the turns, and the type of turns used. The amount of inductance measured by the AUTO-Z will be the same inductance seen by the circuit.

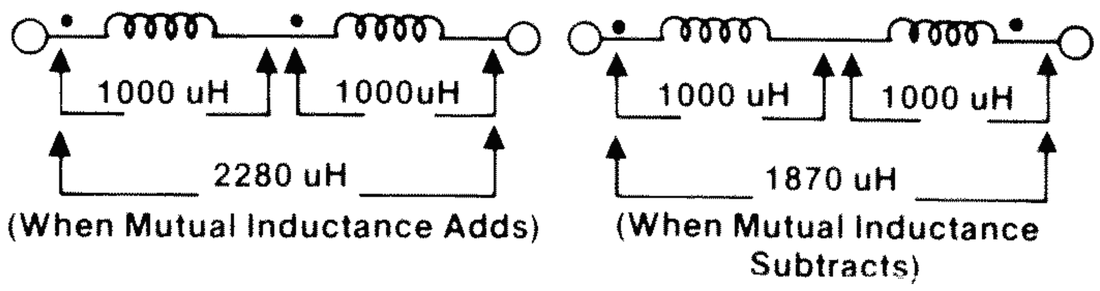

Fig. 59 — The effects of mutual inductance may add or subtract from the sum of the individual.

Ringing Peaking Coils

Peaking coils are often wound around a resistor. The resistor serves to lower the Q of the coil to prevent ringing. For this reason, some good peaking coils will not read good on the INDUCTOR RINGER test. The lower the resistor value, the fewer rings the coil will read.

The best test for peaking coils is to observe the number of rings, rather than the GOOD/BAD indication, and compare the coil to an identical known good component.

Ringing Metal Shielded Coils

Sometimes coils, such as IF transformers, may be placed inside a shield to reduce in-circuit interference. These shielded coils may not ring good when tested with the INDUCTOR RINGER test because the metal shield absorbs some of the ring energy.

A shielded coil is good if it rings ten or more. However, if it rings less than ten, remove the metal shield, if possible, and test the coil again. If it now rings 10 or more, the coil is good. If you are unable to remove the metal shield, make a comparison test using an identical, known good component.

Ringing Flyback Transformers

A flyback transformer is a special type of transformer which produces the focus and second anode voltages for a CRT. Many flybacks also have several lower voltage, relatively high current windings which power other circuits and the CRT filament. Because of the high voltages present, a flyback transformer may develop an internal shorted turn. A shorted turn reduces the efficiency of the transformer and usually causes severe circuit problems. Inductance measurements are of little value when troubleshooting a flyback, since a shorted turn causes little change in inductance value. In addition, the inductance value is seldom known. The LC102 INDUCTOR RINGER test will detect a shorted turn in any of the primary or secondary windings of a flyback.

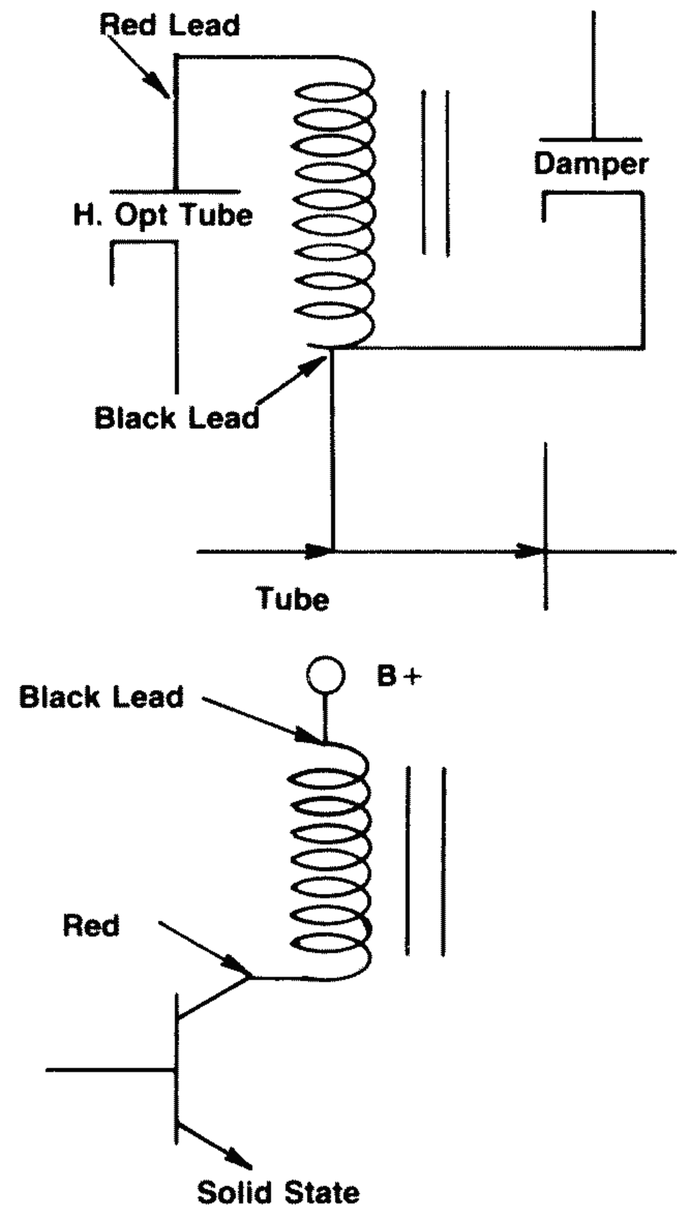

Fig. 60 — Connect to the primary side of a flyback to do the ringing test.

A flyback transformer may be tested in or out of circuit with the LC102 Ringer test, although several external loads may need to be disconnected before a good flyback will ring. Connect the LC102 to the primary of the flyback and select the "YOKES & FLYBACKS" COMPONENT TYPE switch. Depress the Inductor Ringer test button and read the condition of the flyback as "GOOD" or "BAD" in the LC102 display. If the flyback rings "BAD", disconnect any loads until the display reads "GOOD". If the flyback is completely disconnected and still rings "Bad" the flyback has a shorted turn, or the winding to which the test leads are connected is open. In either case, the flyback should be considered bad.

NOTE: Certain flybacks have removeable cores. The ferrite core must be installed inside the windings in order for the flyback to ring "GOOD".

A few flybacks used in some small solid state chassis have a low impedance primary which will not ring when good. However, these flybacks will always have a secondary winding which will ring good if the transformer is good. Simply ring the secondary windings. If one rings good the flyback does not have any shorted turns. If no winding rings good the flyback is bad.

A coil in the secondary of a flyback may occasionally open, rather than short. An open coil will not load the other windings as a short does. If the operation of the chassis indicates the possibility of an open winding, leave the LC102 connected to the primary winding and short each of the windings with a jumper. Shorting out a winding will reflect back to the primary and cause the ring test to go from "GOOD" to "BAD". If the ring test does not change, the winding being shorted with the jumper is open.

WARNING

Do not connect the LC102 test leads to a flyback in-circuit until all power to the chassis has be removed, and the AC line cord has been disconnected.

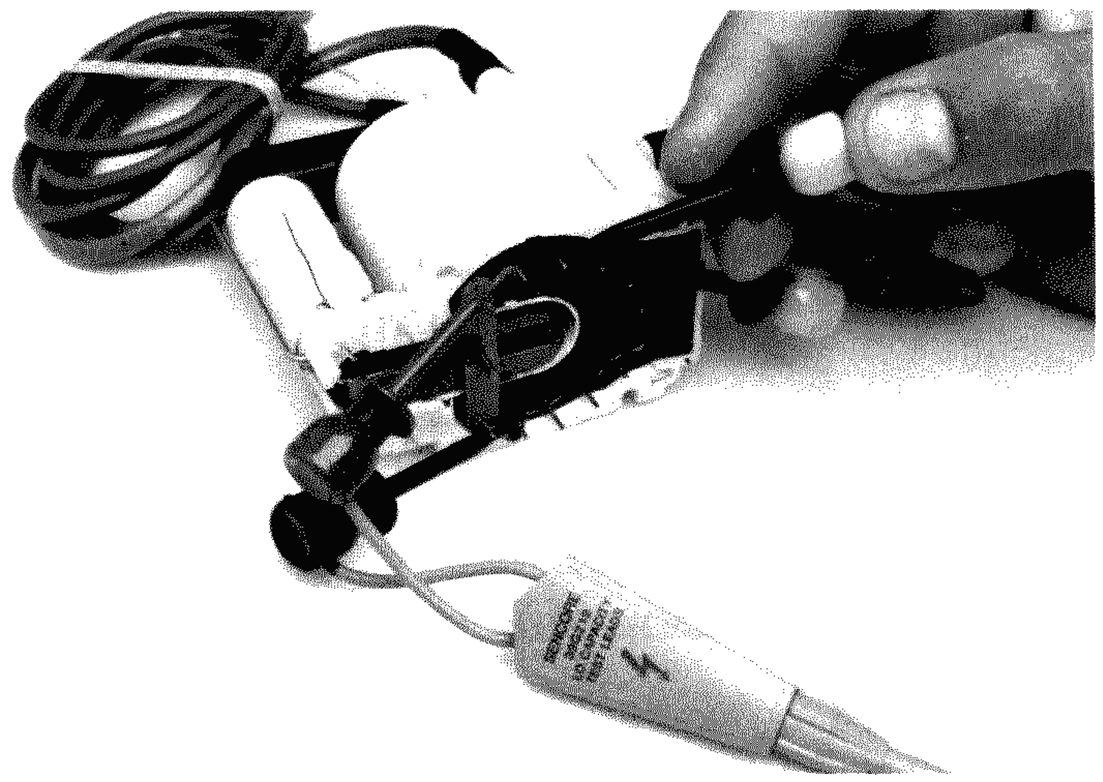

Fig. 61 — Use a jumper to determine if a flyback winding is open. An open winding will not cause the ringing test to change when a jumper is placed across it.

To Ring a flyback transformer:

1. Connect the red test lead to the collector of the horizontal output transistor, or to the plate cap of a horizontal output tube.

2. Connect the black test lead to B+ side of the primary winding. In a tube set connect to the cathode of the damper diode or anode of the boost rectifier.

3. Pull the socket off the CRT (remove the high voltage rectifier tube in a tube chassis) to prevent the filaments from loading the secondary and giving a false ringing indication.

4. Depress the INDUCTOR RINGER test button. If the LC102 display reads "GOOD" the flyback is good, and the remaining steps are not necessary.

A "BAD" reading indicates that either the flyback has a shorted turn or that it is being loaded down. The following steps will locate the defect. Continue disconnecting the loads in the following order until the flyback rings "GOOD". If the flyback rings "GOOD" after you disconnect a load, double check that load to make sure it is not defective.

5. Disconnect the horizontal yoke windings and repeat the ringing test.

6. If the ringing test still reads BAD, remove one end of the damper diode in solid state chassis and repeat the test.

7. If the ringing test still reads BAD, unplug the convergence coils and repeat the test.

8. If the ringing test still indicates BAD, disconnect any remaining low voltage, AGC or other windings one at a time.

9. If all the loads are disconnected and the ringing test still indicates BAD, the flyback has a shorted turn.

Many flybacks used in solid state chassis have the high voltage rectifier diodes (tripler) built into the secondary winding. These flybacks are called Integrated High Voltage Transformers (IHVTs). The Ringing test will locate defective turns in these types of flybacks as well. A problem with the diodes will result in problems with the high voltage, even though the Ringing test indicates "GOOD". If the flyback rings "GOOD" but produces no high voltage, one of the diodes is open. If the high voltage is several thousand volts too low and the flyback rings good, one or more of the diodes is shorted. In either case, the flyback is defective and must be replaced.

Ringing Deflection Yokes

Video deflection yokes are special inductors which are used to move a CRT electron beam both vertically and horizontally. As with flybacks, the LC102 Ringing test provides a quick and reliable GOOD/BAD test. Yokes should be tested while they are still mounted on the CRT, since a shorted winding may be caused by the pressure of the yoke mounting. Relieving the pressure may cause the short to go away.

A deflection yoke has two sets of windings (horizontal and vertical) which must both test good. The yoke leads must be disconnected from the circuit. This is often accomplished by simply pulling the yoke plug from the chassis. The vertical windings may often have damping resistors across them which also must be disconnected. These resistors may be on the chassis, in which case simply pulling the yoke plug will disconnect them.

They may also be soldered right to the yoke, meaning you will need to unsolder one side of the resistor. Test both yoke windings with the "YOKES & FLYBACK" COMPONENT TYPE button selected.

NOTE: Test the vertical windings individually on yokes that have series connected vertical windings. The vertical windings should read within 3 rings of each other, but may not necessarily ring "GOOD" with 10 or more rings. Any such yoke that has a ring difference greater than 3 rings, or an inductance value difference greater than 10% will give problems in the chassis.

WARNING

Do not connect the LC102 to the yoke in the chassis until all power has been removed and the AC plug has been disconnected.

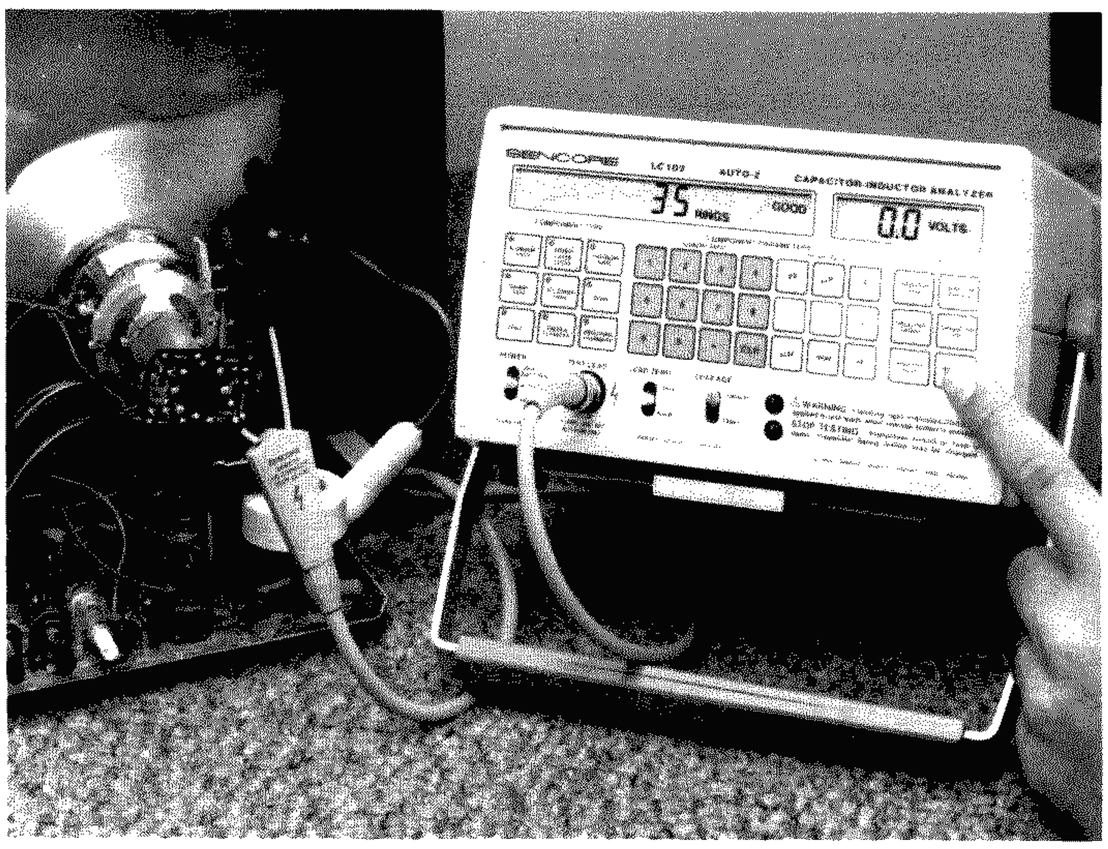

Fig. 62 — Test deflection yokes with the ringing test while the yoke is still mounted on the CRT.

To test horizontal yoke windings:

1. Disconnect the yoke from the circuit by pulling the yoke plug or unsoldering the wires.

2. Connect the test leads to the horizontal winding.

3. Select the "YOKES & FLYBACKS" COMPONENT TYPE button.

4. Depress the INDUCTOR RINGER test button and read the test result in the LC102 display.

5. If the horizontal windings tests "GOOD", continue on and test the vertical winding. The vertical windings must also test "GOOD" before you consider the yoke good. If the horizontal winding tests "BAD" the yoke is defective and there is no need to test the vertical windings.

To test the vertical windings:

6. If the yoke has damping resistors across the vertical winding, unsolder one end of the resistor.

7. Connect the test leads to the vertical winding.

8. Depress the INDUCTOR RINGER test button and read the test result in the LC102 display.

9. If the vertical windings do not test "GOOD", the yoke is defective.

Special Note On Solid State Yokes And Flybacks:

A few yokes and flybacks have very low Q for use in certain solid state chassis. These components may not ring "GOOD" but may rather ring only 8 or 9 times. To determine if they are good or bad simply add a "shorted turn" and again check the number of rings. If the yoke or flyback is good, the number of rings will drop drastically when the short is added. A defective yoke or flyback will not be affected by the shorted turn and the number of rings will change only 1 or 2 counts if at all.

A simple "shorted turn" is a piece of solder or heavy gauge wire formed into a loop. Press the loop close to the windings of the yoke or wrap it around the core or windings of the flyback.

Cable Testing Applications

Testing Coaxial Cable

Coaxial cables and transmission lines have characteristics of both an inductor and a capacitor, as illustrated in figure 63. The LC102 AUTO-Z can be used to determine the length of a piece of coaxial cable (or the distance to a break) and the distance to a short between the center conductor and shield. Any breakdown in the dielectric can also be detected using the LC102 leakage power supply.

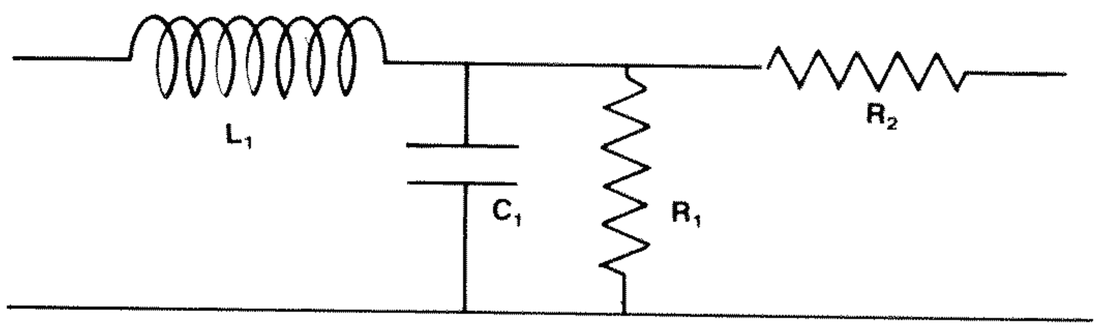

L_1 = Series Inductance
C_1 = Shunt Capacitance
R_1 = Shunt Resistance (dielectric leakage)
R_2 = Series Resistance

Fig. 63 — A length of coaxial cable consists of capacitance and inductance distributed throughout the cable's length.

Determining A Cable's Length Or Distance To An Open

A length of coaxial cable open at both ends is equivalent to a long capacitor, with the two conductors forming the plates. Every type of coaxial cable has a normal amount of capacitance per foot, specified in picofarads per foot (pf/ft). The capacitance per foot values for some common coaxial cable types are listed in Table 14. The length of a piece of cable, as well as the distance to an open, is found by simply measuring the capacitance between the center and outer conductors and dividing this total capacitance by the cable's capacitance per foot value. If possible, measure from both ends of the cable to more accurately pinpoint the break. In most cases, the length of a cable can be determined within 1-2%.

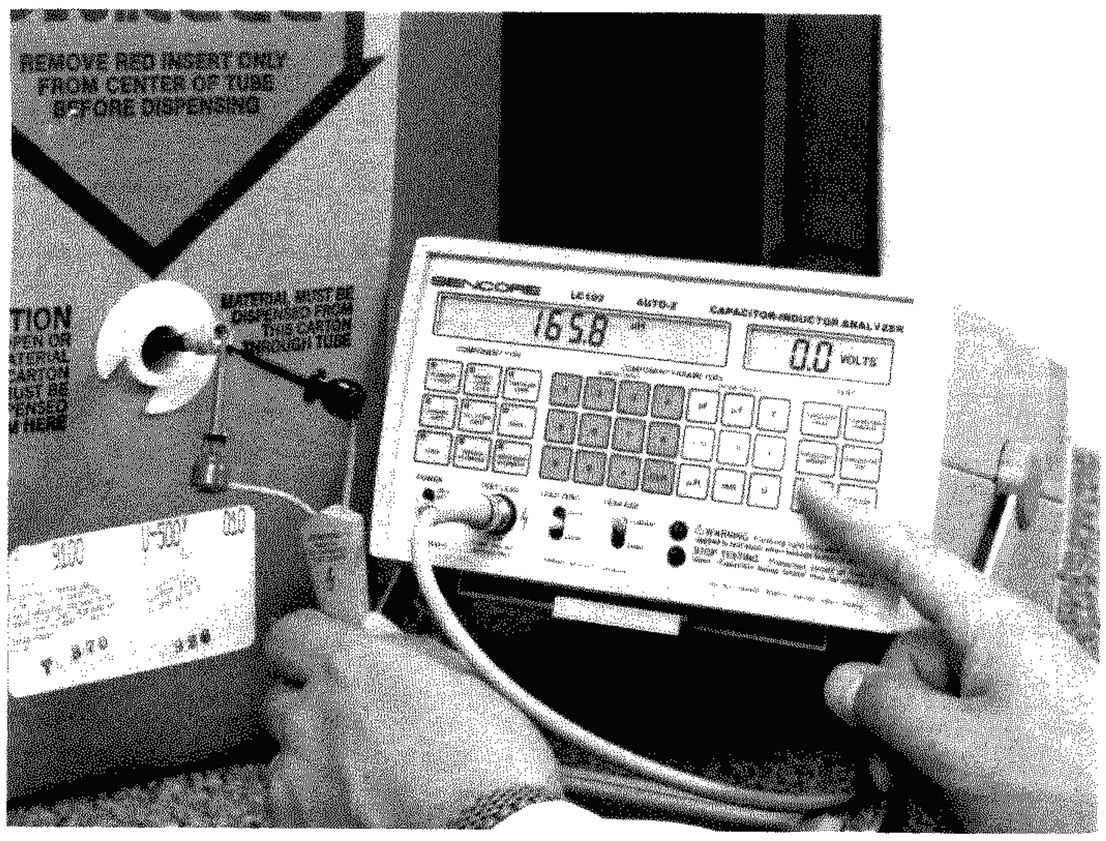

Fig. 64 - Use the LC102 to measure the distance to breaks or shorts in buried cable.

To measure the length of a cable:

1. Zero the LC102 test leads.

2. Connect the red test lead to the center conductor and the black test lead to the braided shield outer conductor of an open (unterminated) cable.

3. Press the CAPACITOR VALUE test button and read the total capacitance of the cable.

4. Divide the LC102 capacitance reading by the cable's capacitance per foot value. This gives the length of the cable, or the distance to the break in feet.

You can also use this test to determine the length or to pinpoint a break in multiconductor cable that has 3 or more conductors. Due to variations in conductor spacing and noise pickup, however, the accuracy will not be as good as for coaxial cable. Follow the same procedure as above, except tie all but one of the conductors together to form the outer "shield". Measure the capacitance between this "shield" and the remaining single wire. You can determine the capacitance per foot for the cable using the procedure in the section "Determining Capacitance And Inductance Per Foot".

NOTES: 1. The accuracy of these measurements depends on the cable tolerance. The values listed in Table 14 are nominal amounts which may very slightly (within 2%) with cable manufacturer. 2. Excessive crimping or clamping along the cable will change the total capacitance reading.

LOCATING A SHORT IN COAXIAL CABLE

A coaxial cable which has a short between its center conductor and outer conductor is similar to a very long inductor. The LC102 can be used to determine the distance to a short using the INDUCTOR VALUE test. The amount of inductance per foot of a coaxial cable is not usually published by the cable manufacturer, and the amount for the same type of cable may vary significantly from one manufacturer to another. Therefore, to calculate the distance to a short you must first use a sample length of cable to determine the inductance per foot value, as explained in the following section. Record this amount in Table 14 for each type and manufacturer of cable you encounter.

To determine the distance to a short:

1. Zero the LC102 test leads.

2. Connect the red test lead to the center conductor and the black test lead to the braided shield outer conductor of a shorted cable.

50-55 Ohm

	Nominal	Nominal	Nominal
RG/U Cable Type	Impedance	Cap in pF/FT	Inductance
5B/U	50	29.5	
8U	52	29.5	
8U Foam	50	26	
8A/U	52	29.5	
10A/U	52	29.5	
18A/U	52	29.5	
58/U	53.5	28.5	
58/U Foam	50	26	
58A/U	50	30.8	
58C/U	50	29.5	
58C/U Foam	50	26	
74A/U	52	29.5	
174/U	50	30-30.8	
177/U	50	30	
212/U	50	29.5	
213/U	50	30.5	
214/U	50	30.5	
215/U	50	30.5	
219/U	50	30	
225/U	50	30	
224/U	50	30	

70-75 Ohm

	Nominal	Nominal	Nominal
RG/U Cable Type	Impedance	Cap in pF	Inductance uH/FT
6A/U	75	20	
6A/U Foam	75	20	
11U	75	20.5	
11U Foam	75	17.3	
11A/U	75	20.5	
12A/U	75	20.5	
13A/U	74	20.5	
34B/U	75	20	
35B/U	75	20.5	
59/U	73	21	
59/U Foam	75	17.3	
59/BU	75	20.5	
164/U	75	20.5	
216/U	75	20.5	

90-125 Ohm

	Nominal	Nominal	Nominal
RG/U Cable Type	Impedance	Cap in pF	Inductance uH/FT
62/U	93	13.5	
62A/U	93	13.5	
63B/U	125	10	
71B/U	93	13.5	
79B/U	125	10	

Table 14 — Capacitance per foot values for common coaxial cable types.

3. Press the INDUCTOR VALUE test button and read the total inductance of the cable.

4. Divide the LC102 inductance reading by the cable's inductance per foot value. This gives the distance to the short in feet.

NOTE: To help pinpoint the short with greater accuracy, measure the inductance from both ends of the cable.

Determining Capacitance And Inductance Per Foot

The capacitance and inductance per foot values for a particular type of coaxial cable can be determined by measuring a sample cable of known length. After you measure the amount of capacitance and inductance with the LC102, simply divide the total amount by the length of the sample. A sample length of at least 10 feet is recommend for an accurate capacitance measurement, and 25 feet for accurate inductance measurement.

To determine capacitance and inductance per foot amounts:

1. Zero the LC102 test leads.

2. Connect the red test lead to the center conductor and the black test lead to the braided shield outer conductor at one end of the sample cable.

3. Leave the other end of the cable open to measure capacitance on. Short them together to measure inductance.

4. Press the CAPACITOR VALUE or INDUCTOR VALUE test button and read the total capacitance or inductance of the cable.

5. Divide the LC102 reading by the length of the sample cable.

Using The LC102 To Find Aging Cable

All coaxial cables eventually degrade to the point where they need to be replaced. The LC102 can be used for preventative maintenance checks of coaxial cable to determine if deterioration is beginning to occur. As a cable begins to fail, the dielectric separating the conductors becomes contaminated causing a change in the cable's capacitance and the DC leakage through the dielectric.

All cable has a normal amount of capacitance per foot and any significant change that occurs over a period of time indicates a developing problem. The best check for aging cable is to measure and record the total capacitance of the installation when it is first installed. If the initial value is not known, you can multiply the length of the cable by its nominal capacitance per foot. Then compare periodic capacitance measurements back to the initial amount and look for any changes. As the dielectric becomes contaminated, the LC102 capacitance reading will increase.

The LC102 leakage power supply also provides a good test of a cable's condition. Simply measure the amount of leakage through the dielectric between the conductors. Most cables have a maximum operating voltage of 1000 volts or more and should be tested with the LC102 leakage supply set to 999.9 volts. A few "air space" dielectric types of coaxial cable, such as RG37, RG62, RG71, and RG72 have a maximum operating voltage of 750 volts and should be tested at this lower voltage.

WARNING

This test should only be performed by a qualified person who understands the shock and safety hazards of up to 1000 volts applied to the test leads and open ends on the coaxial cable.

A good piece of cable should have no leakage when the voltage from the LC102 is applied between the center conductor and outside shield. The length of the cable being tested will make no difference on the leakage reading. Any leakage reading indicates the dielectric is breaking down.

High Potential Testing

The LC102 AUTO-Z can be used to locate leakage currents as low as .1 uA, such as the leakage between PC board foils, leakage between windings of a transformer, and leakage between switch contacts and shafts. These leakage currents are much too small to be measured with an ohmmeter, but are measurable when a high voltage potential (Hi Pot) is applied with the LC102 leakage power supply.

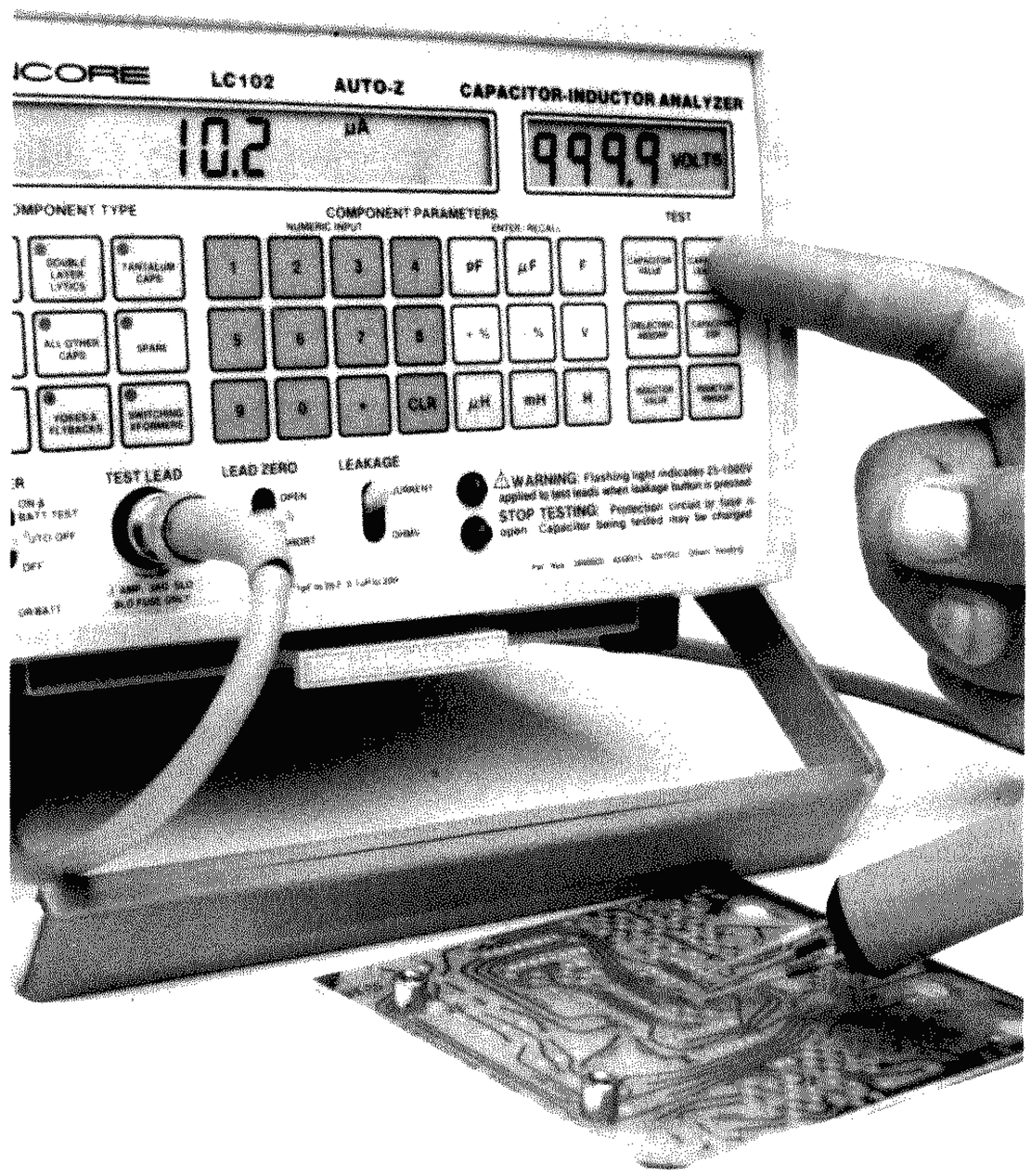

Fig. 65 - Small leakage paths can be detected with the LC102 Hi Pot test.

WARNING

These tests are only to be performed by a person who understands the shock hazard of up to 1000 volts applied to the test leads and to the component under test when the Capacitor Leakage button is depressed. Do not hold the test leads or the component under test in your hands when making any Hi Pot test.

Traces on a bare printed circuit board should show no leakage when tested at 1000 volts with the LC102. Any leakage indicates contamination on the board, or fine, hair-like projections from the etched traces shorting between the traces. The (optional) 39G85 TOUCH TEST PROBE may be used to make easy connection to the foils. It provides needle-sharp points that are adjustable for different trace spacings.

AC power transformers should be tested to make sure they provide proper isolation from the AC line. Transformers should be tested for leakage between the primary and secondary, as well as for leakage between the windings and the metal core or frame. To test for leakage between primary and secondary disconnect all transformer leads from the circuit. Connect one of the LC102 test leads to one of the primary leads and the other LC102 lead to one of the secondary leads. If the transformer has more than one secondary winding, each should be tested for leakage. Most transformers used today have a 1500 volt break down rating and should have 0 microamps of leakage when tested at 1000 volts with the LC102. Any leakage indicates a potential shock and safety hazard.

Measuring Resistors To 1 Gigohm

Focus and high voltage resistors up to 1 Gigohm may be measured using the leakage power supply in the LC102. These resistors are often much too large in value to be measured with any other test. The AUTO-Z will read the resistance of these resistors without any calculations.

The range of resistance which the LC102 will measure depends on the applied voltage. Table 15 shows the amount of applied voltage needed to produce a usable resistance reading. Simply place the front panel LEAKAGE switch in the "OHMS" position, set the leakage power supply to a voltage just high enough to read the anticipated resistance, and depress the CAPACITOR LEAKAGE test button. The AUTO-Z will display the amount of resistance directly in ohms.

WARNING

This test is only intended to measure high voltage resistors. Some resistors have voltage ratings of 200 volts or less and will be damaged by high test voltages. Apply only enough voltage to the resistor (as shown in Table 15) to produce a reading.

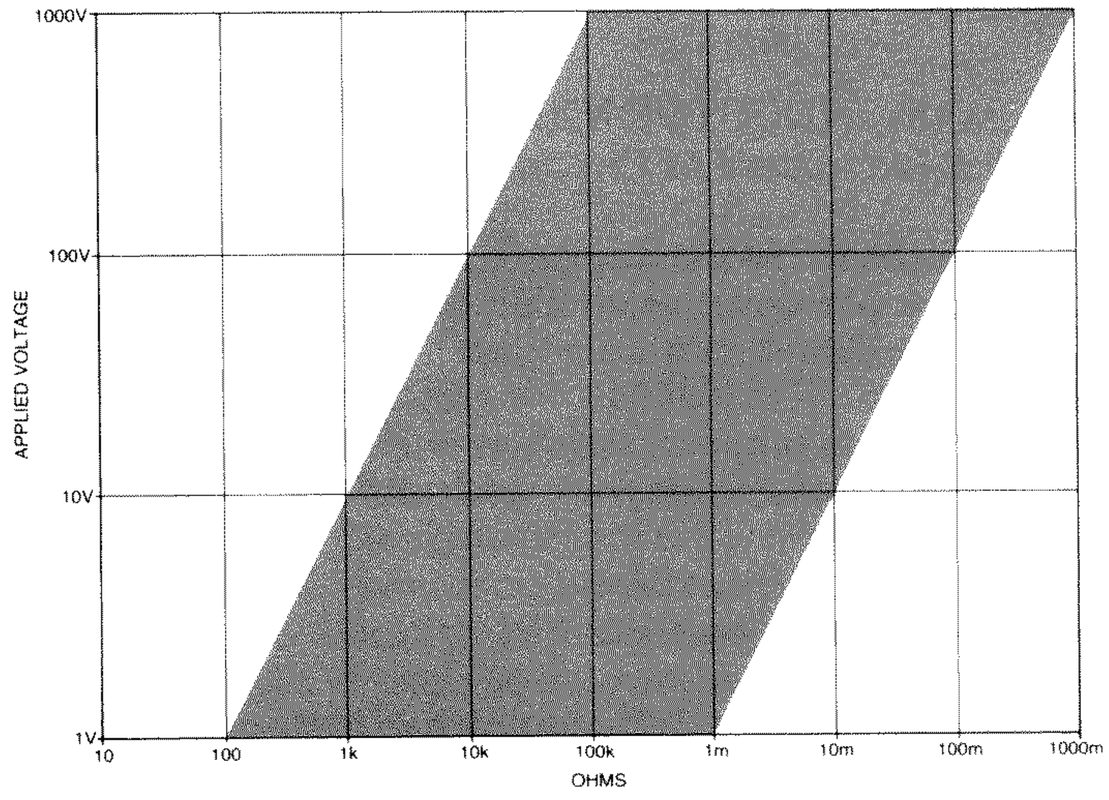

Table 15 — To measure resistance values up to 1 gigohm, enter the necessary leakage voltage amount to place the resistance value within the shaded area.

Applications Of The Leakage Power Supply

Many times a variable voltage DC power supply is needed in troubleshooting and other applications such as applying a bias voltage or powering a circuit. The LC102 leakage power supply may be used in these applications to provide voltages in 0.1 volt steps from 1.0 to 999.9 volts DC. Simply enter the desired voltage using the COMPONENT PARAMETERS keypad and use the 39G201 TEST BUTTON HOLD DOWN ROD to keep the CAPACITOR LEAKAGE button depressed.

The amount of current being drawn by the circuit connected to the LC102 will be displayed in the LCD display up to 19.9 milliamps. (Currents greater than 20 mA will cause the LCD display to overrange). The leakage power supply is current limited and will not be damaged by excessive current draw. When overloaded, the output voltage will drop to a level that will not damage the supply. Table 16 shows the amount of current which the leakage power supply can provide with less than a 10% reduction in output voltage.

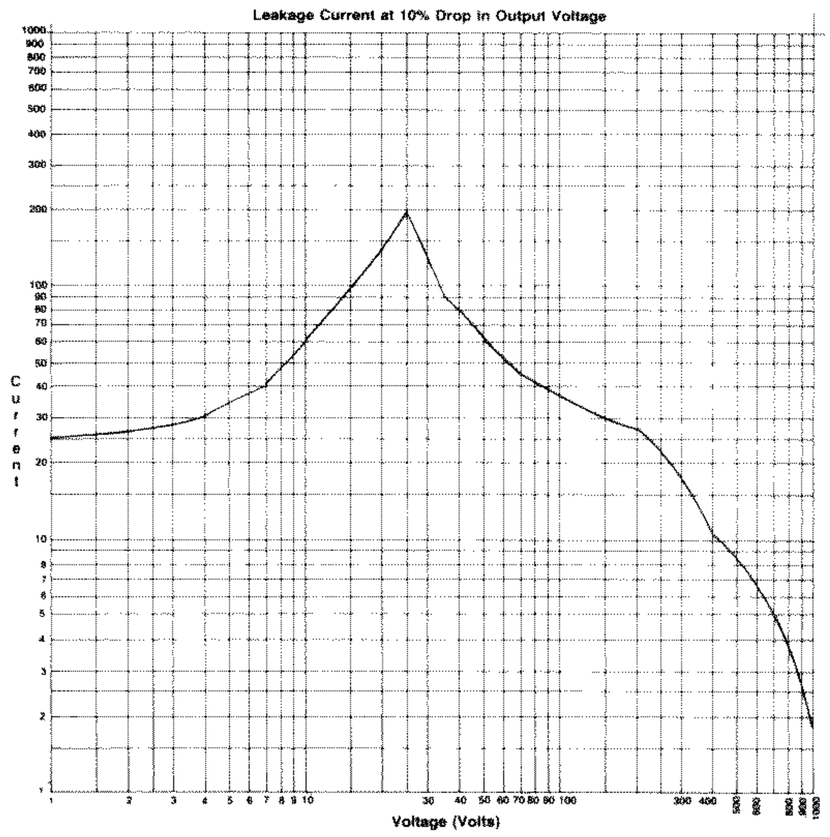

Table 16 - Current output capabilities of the AUTO-Z leakage power supply.

MAINTENANCE

Introduction

The LC102 is designed to provide reliable service with very little maintenance. A fully equipped Factory Service Department is ready to back the LC102 should any problems develop. A schematic, parts list, and circuit board layouts are included along with this manual on separate sheets.

Recalibration And Service

Recalibration of the LC102 is recommended on a yearly basis, or whenever the performance of the unit is noticeably affected. Precise standards are required to insure accurate and National Bureau of Standards (NBS) traceable calibration. For this reason it is recommended that the LC102 be returned to the Sencore Factory Service Department for recalibration. The address of the Service Department is listed below. No return authorization is required to return the LC102 for calibration or service. In most cases, the unit will be on its way back to you within 3 days after it is received by the Service Department at: Sencore Factory Service
3200 Sencore Drive
Sioux Falls, SD 57107
(605)339-0100.
1-800-843-3338 — US
1-800-851-8866 — Canada

Circuit Description And Calibration Procedures

A complete circuit description, and a detailed calibration procedure listing the necessary standards and equipment, are available for the LC102 AUTO-Z. These items may be purchased separately through the Sencore Factory Service Parts Department at the address and phone number listed above.

Replacement Leads

The 39G219 Test Leads on the LC102 are made from a special low capacity cable. Replacing the test leads with a cable other than the low capacity test lead will result in measurement errors. Replacement 39G219 Test Leads are available from the Sencore Service Parts Department.

"Spare" Button

The "SPARE" button on the front panel is provided to keep your LC102 AUTO-Z from becoming obsolete. If a new or different type of component is introduced in the coming years, your LC102 may be updated by changing the EPROM chip or by changing the EPROM memory itself. Be sure to return the warranty card sent with the LC102 so that you can be notified if an update takes place.

Test Lead Fuse

A 1 amp, Slo-Blo (3AG) fuse is located in the test lead input jack on the front of the AUTO-Z. This fuse protects the unit from accidental external voltage or current overloads.

For your safety the LC102 is equipped with a stop testing alarm. This alarm is triggered when either the fuse blows or the discharge circuits open. If either of these conditions occur an LED will flash and an audible alarm will be activated.
When alarm is activated you should:
1. Shut off Z Meter.
2. Discharge capacitor through a 10k 1W resistor.
3. Determine cause of the alarm.
4. Replace the fuse if blown.
5. Resume testing.

WARNING

When STOP TESTING alarm sounds, stop all testing with the LC102. The capacitor being tested may be charged.

Fuse Replacement

The fuse for the test lead input is located behind the BNC input jack. Remove the fuse holder by turning the BNC connector counter clockwise and unscrewing the connector until the fuse is free. The BNC connector of the test leads may be used as a "Wrench" to aid in the removal of the fuse holder. When replacing the fuse holder, make sure it is screwed in tightly to prevent the connector from turning when connecting and disconnecting test leads. Replace the fuse with a 1 Amp Slo-Blo (3AG) fuse only.

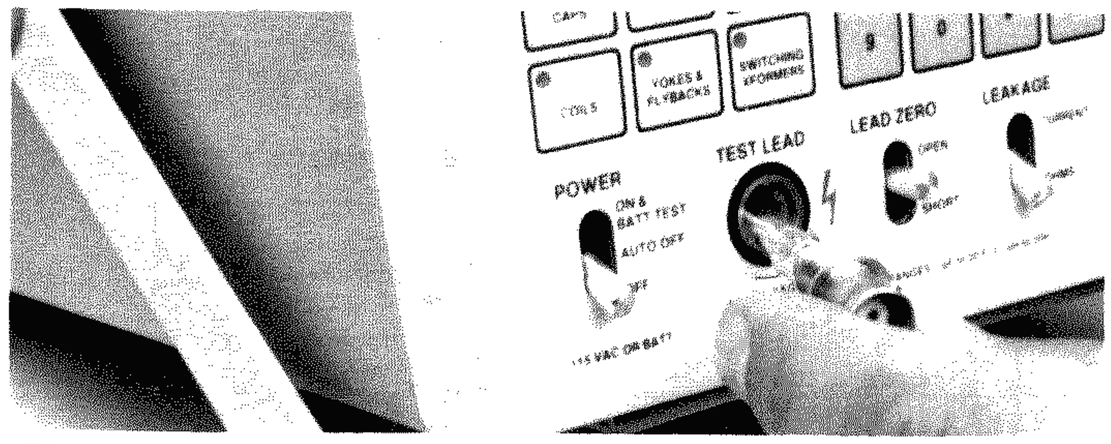

Fig. 66 — Remove the TEST LEAD BNC jack to replace the input protection fuse.

Display Test

The LCD display of the LC102 AUTO-Z may be tested at any time by performing the battery test and pushing the CLR button at the same time. All the segments of the LCD readout will momentarily turn on followed by a sequential readout of all the numbers and symbols on the display. Any missing segments, symbols, or numbers indicate a defect either in the display itself or an internal circuit. In this case the Sencore Factory Service Department should be called for service instructions.

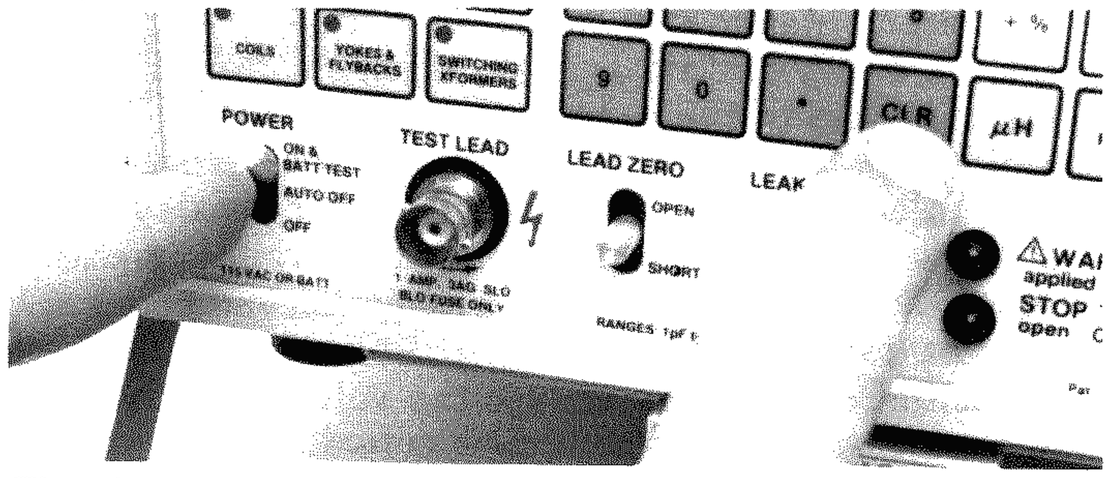

Fig. 67 — Push the "CLR" button while holding the power switch to "ON & BATT TEST" to check LCD display.

APPENDIX

Introduction

The capacitor is one of the most common components used in electronics, but less is known about it than any other component in electronics. The following is a brief explanation of the capacitor, how it works, and how the AUTO-Z measures the important parameters of the capacitor.

Capacitor Theory And The AUTO-Z

The basic capacitor is a pair of metal plates separated by an insulating material called the dielectric. The size of the plates, the type of dielectric, and the thickness of the dielectric determines the capacity. To increase capacity, you can increase the size of the plates, increase the number of plates, use a different dielectric or a thinner dielectric. The closer the plates, or the thinner the dielectric, the larger the capacity for a given size plate. Because flat plates are rather impractical, capacitors are generally made by putting an insulating material (dielectric) between two foil strips and rolling the combination into a tight package or roll.

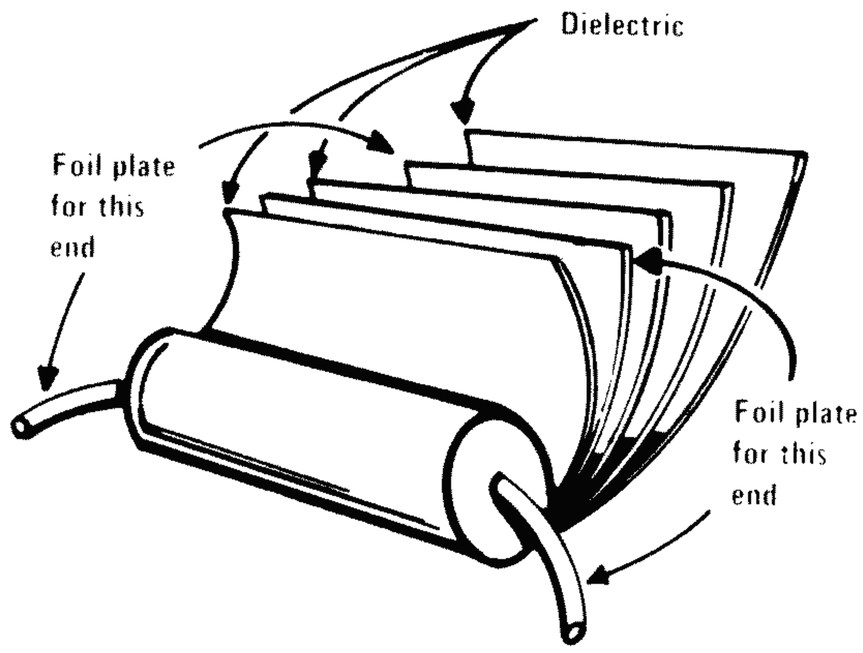

Fig. A — Many capacitors are made of foil separated by a dielectric and rolled into a tight package.

The old explanation of how a capacitor works had the electrons piling up on one plate forcing the electrons off of the other to charge a capacitor. This made it difficult to explain other actions of the capacitor. Faraday's theory more closely approaches the way a capacitor really works. He stated that the charge is in the dielectric material and not on the plates of the capacitor. Inside the capacitor's dielectric material, there are tiny electric dipoles. When a voltage is applied to the plates of the capacitor, the dipoles are stressed and forced to line up in rows creating stored energy in the dielectric. The dielectric has undergone a physical change similar to that of soft iron when exposed to current through an inductor when it becomes a magnet. If we were able to remove the dielectric of a charged capacitor, amd then measure the voltage on the plates of the capacitor, we would find no voltage. Reinserting the dielectric and then measuring the plates, we would find the voltage that the capacitor had been charged to before we had removed the dielectric. The charge of the capacitor is actually stored in the dielectric material. When the capacitor is discharged, the electric dipoles become re-oriented in a random fashion, discharging their stored energy.

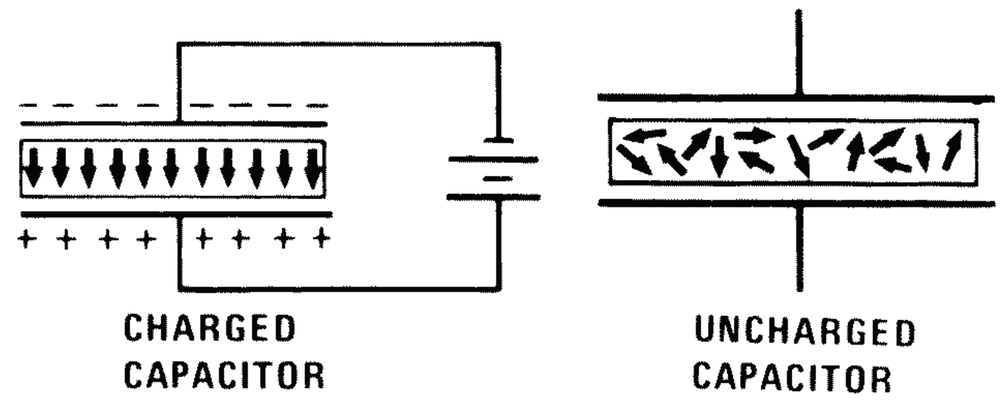

Fig. B — Applying a potential to a capacitor causes the dipoles in the dielectric to align with the applied potential. When the capacitor discharges the dipoles return to an unaligned, random order.

When a capacitor is connected to a voltage source, it does not become fully charged instantaneously, but takes a definite amount of time. The time required for the capacitor to charge is determined by the size or capacity of the capacitor, and the resistor in series with the capacitor or its own internal series resistance. This is called the RC time constant. Capacity in Farads multiplied by resistance in Ohms equals the RC time constant in seconds. The curve of the charge of the capacitor is the RC charge curve.

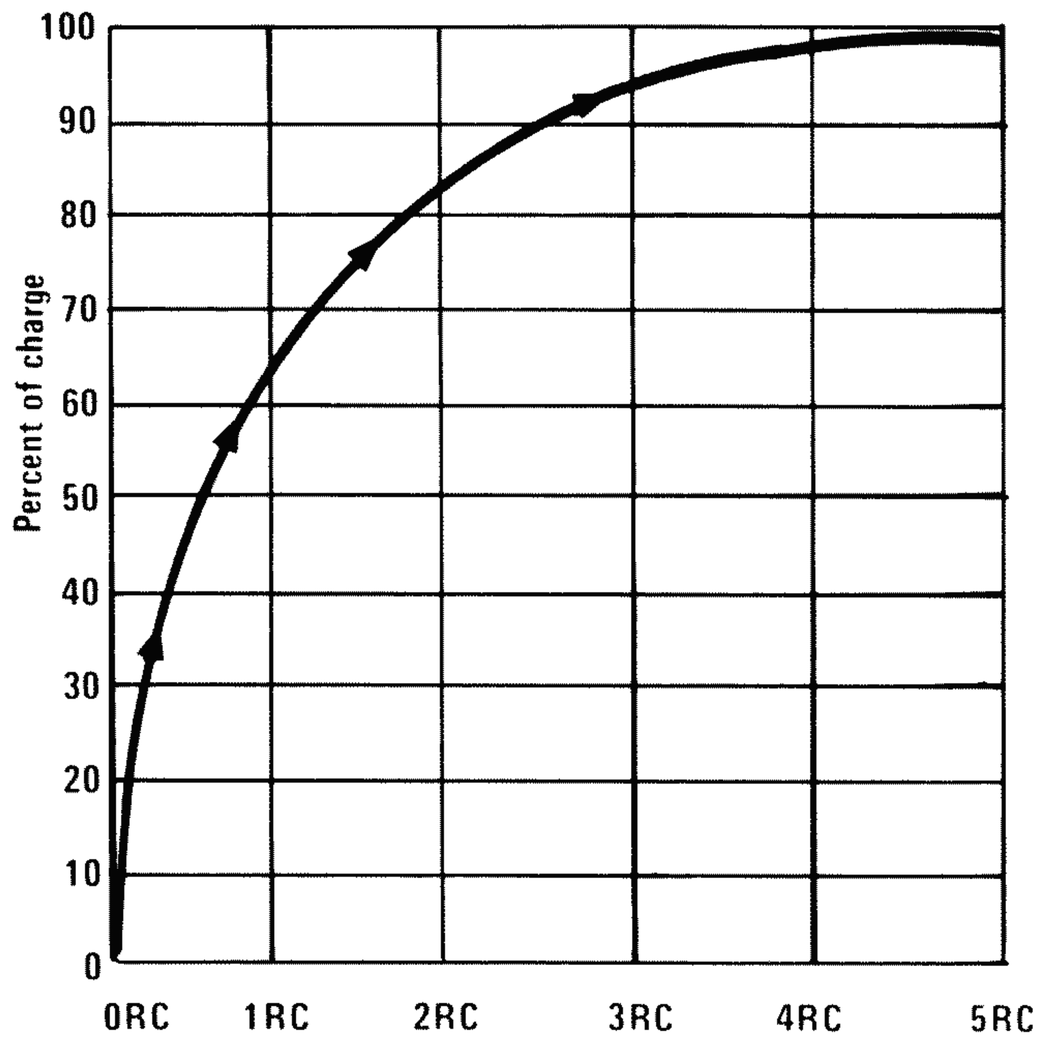

Fig. C — Capacitors follow an RC charge time as they charge to the applied voltage.

The AUTO-Z makes use of this charge curve to measure the capacity of a capacitor. By applying a pulsating DC voltage to the capacitor under test and measuring the time on its RC charge curve, the capacity of the capacitor can be determined very accurately.

Capacitor Types

There are many different types of capacitors, using different types of dielectrics, each with its own best capability. When replacing capacitors, it is best to replace with a capacitor having not only the same capacity and tolerance, but the same type of dielectric and temperature characteristics as well. This will insure of continued performance equal to the original.

The capacitor is often named according to the type of dielectric which is used, such as paper, mylar, ceramic, mica or aluminum electrolytic.

Paper and mica were the standard dielectric materials used in capacitors for years. Ceramic became popular due to its stability and controlled characteristics and lower cost over mica. Today, there are many dielectrics with different ratings and uses in capacitors. Plastic films of polyester, polycarbonate, polystyrene, polypropylene, and polysulfone are used in many of the newer large value, small size capacitors. Each film has its own special characteristics and is chosen to be used in the circuit for this special feature. Some of the plastic films are also metalized by vacuum plating the film with a metal. These are generally called self-healing type capacitors and should not be replaced with any other type.

Ceramics

Ceramic dielectric is the most versatile of all. Many variations of capacity can be created by altering the ceramic material. Capacitors that increase, stay the same value, or decrease value with temperature changes can be made. If a ceramic disc is marked with a letter P such as P100, then the value of the capacitor will increase 100 parts per million per degree centigrade increase in temperature. If the capacitor is marked NPO or COG, then the value of capacity will remain constant with an increase in the temperature.

Ceramic disc capacitors marked with an N such as N1500 will decrease in capacity as the temperature increases. The negative temperature coefficient is important in many circuits such as the tuned circuits of the radio and television IF. The temperature coefficient of an inductor is positive and the inductance will increase as the temperature rises. If the tuning capacitor across the coil is a negative coefficient, then the net result will be a zero or very little change.

General type ceramic discs are often marked with such letters as Z5U, Z5F, Y5V, X5V, and so forth. This indicates the type of temperature curve for the particular capacitor. Ceramic capacitors that are not NPO or rated with N or P type characteristics will have wider temperature variations and can vary both positive and negative with temperature changes. The Z5U probably has the greatest change and will only be found in non-critical applications such as B+ power supply decoupling. These type of capacitors should not be used in critical applications such as oscillator and timing circuits.

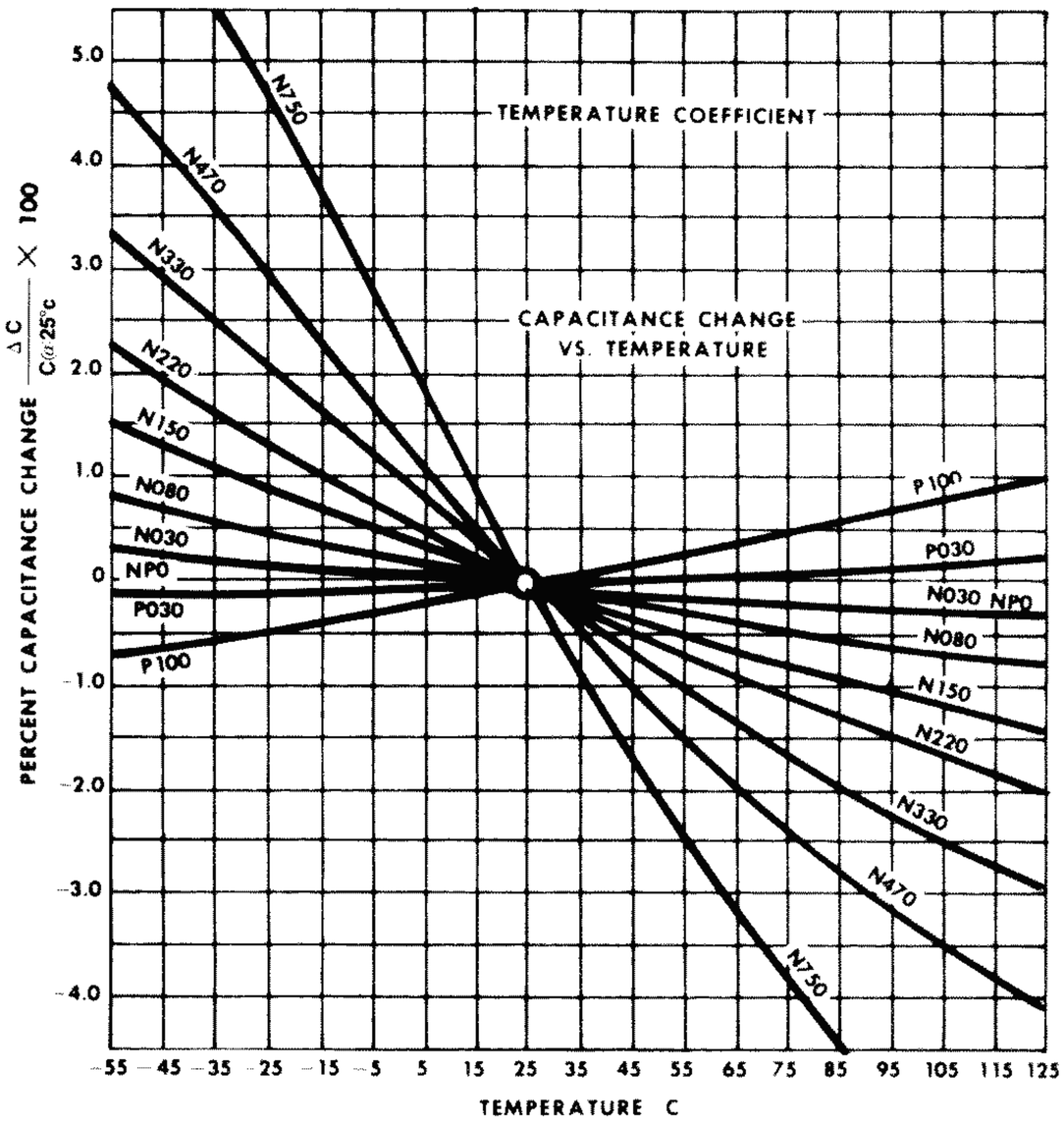

Fig. D — Temperature change versus capacity change of P100 to N750 temperature compensated ceramic disc capacitors.

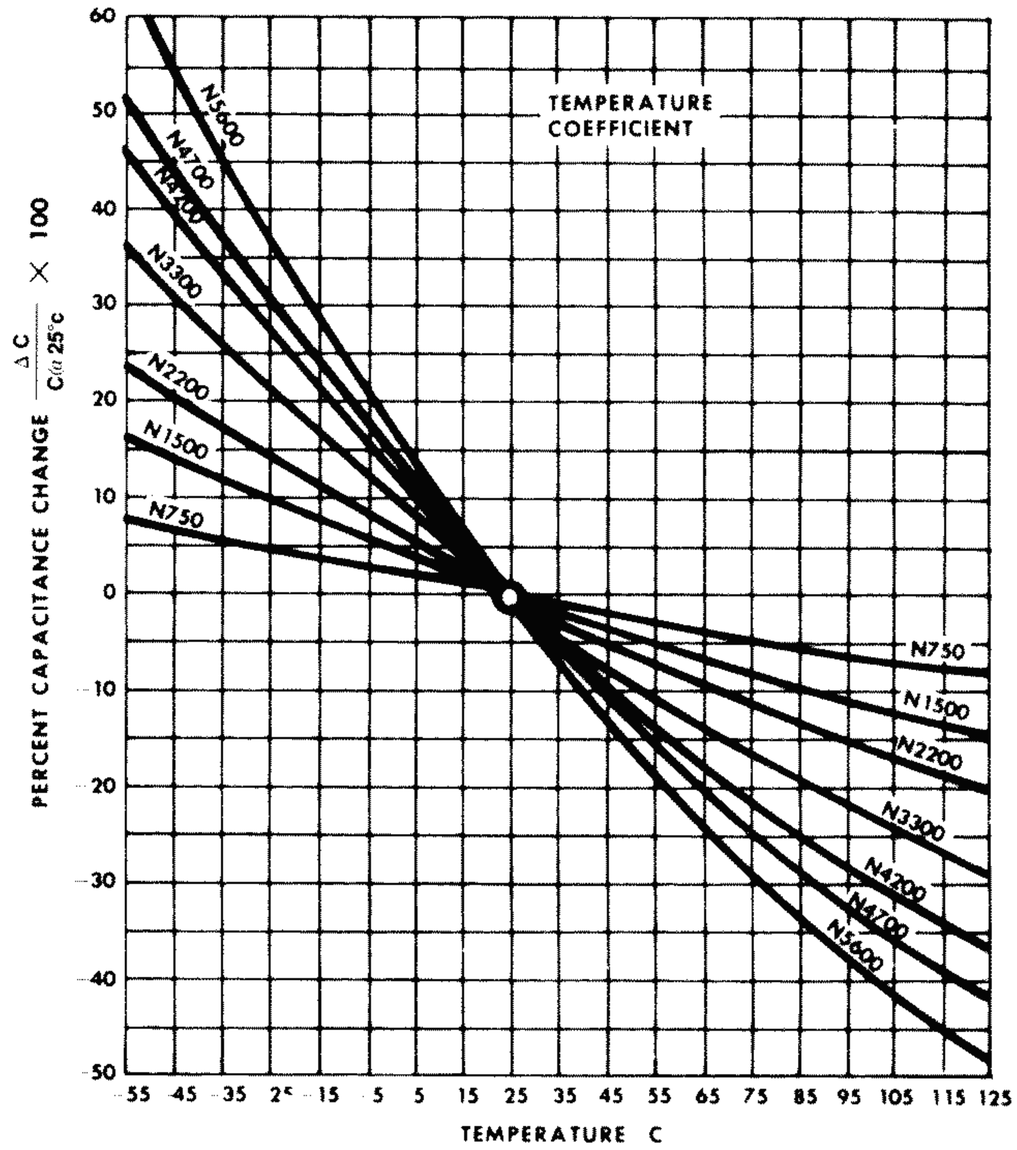

Fig. E — Temperature change versus capacity change of N750 to N5600 temperature compensated ceramic disc capcitors.

A ceramic capacitor marked GMV means that the value marked on the capacitor is the Guaranteed Minimum Value of capacity at room temperature. The actual value of the capacitor can be much higher. This type

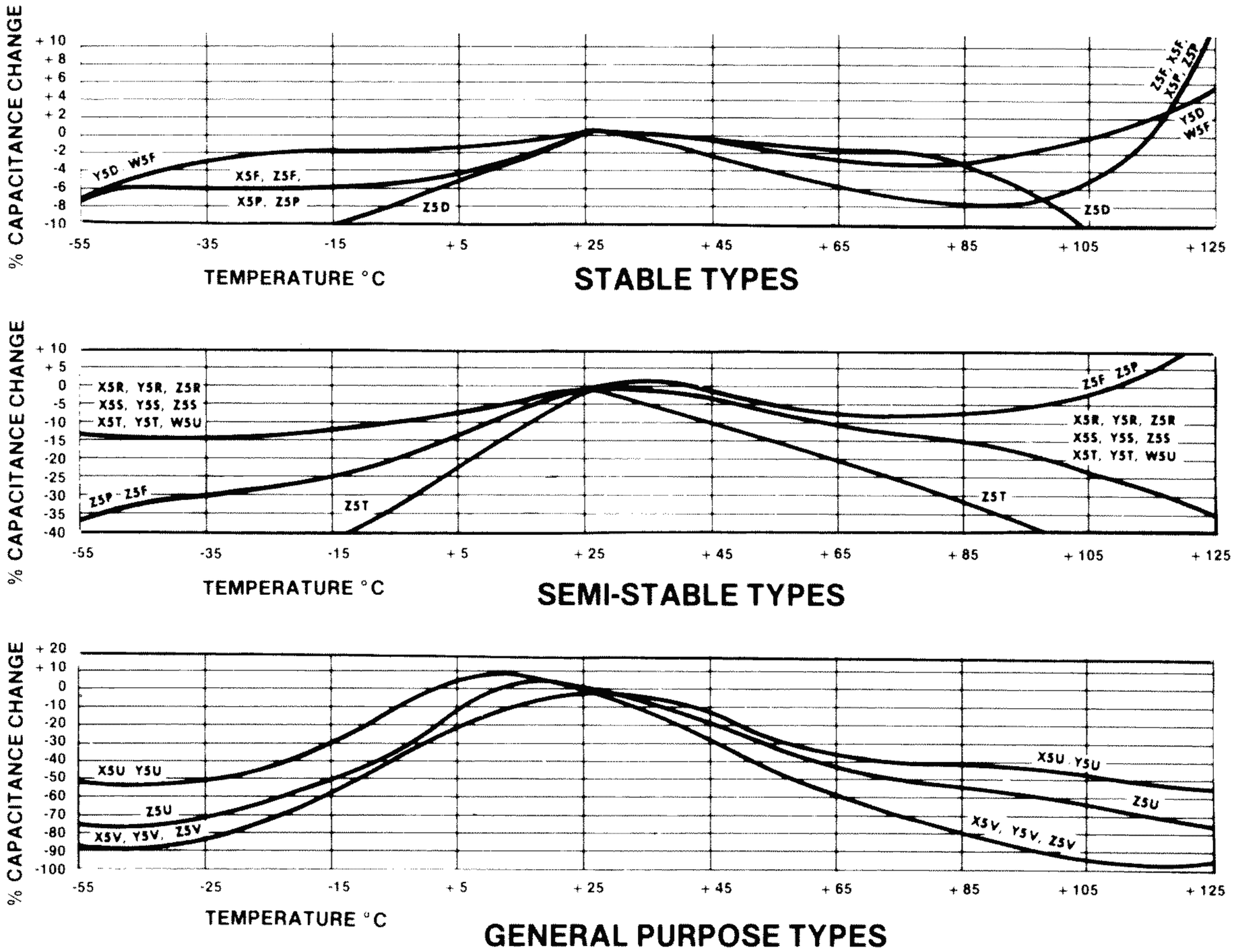

Fig. F — Temperature change versus capacity change of non-temperature compensated ceramic disc capacitors.

of capacitor is used in bypass applications where the actual value of capacity is not critical.

Ceramic capacitors have been the most popular capacitors in electronics because of the versatility of the different temperature coefficients and the cost. When replacing a ceramic disc capacitor, be sure to replace the defective capacitor with one having the same characteristics and voltage rating.

Aluminum Electrolytics

The aluminum electrolytic capacitor or "Lytic" is a very popular component. Large value capacity in a relatively small case with a fairly high voltage rating can be obtained quite easily. The aluminum lytic is used in power supply filtering, audio and video coupling and in bypass applications.

The aluminum lytic is made by using a pure aluminum foil wound with a paper soaked in a liquid electrolyte. When a voltage is applied to the combination, a thin layer of oxide film forms on the pure aluminum forming the dielectric. As long as the electrolyte remains liquid, the capacitor is good or can be reformed after sitting for a while. When the electrolyte drys out the leakage goes up and the capacitor loses capacity. This can happen to aluminum lytics just sitting on the shelf. When an aluminum lytic starts drying out, the capacitor begins to show dielectric absorption. Excessive ESR is also a common failure condition for aluminum lytic capacitors.

Tantalum Electrolytics

The tantalum electrolytic capacitor is becoming very popular. While the leakage in the aluminum lytic is very high due to the nature of its construction, leakage in tantalum capacitors is very low. In addition, tantalum capacitors can be constructed with much tighter tolerances than the aluminum lytic. The tantalum is much smaller in size for the same capacity and working voltage than an aluminum lytic. Tantalum lytics are popular in circuits where high capacity and low leakage is required. The capacity and voltage rating of the tantalum lytic is limited, and for extremely large values of capacity and higher voltages in power supply filtering, the aluminum lytic is still the first choice.

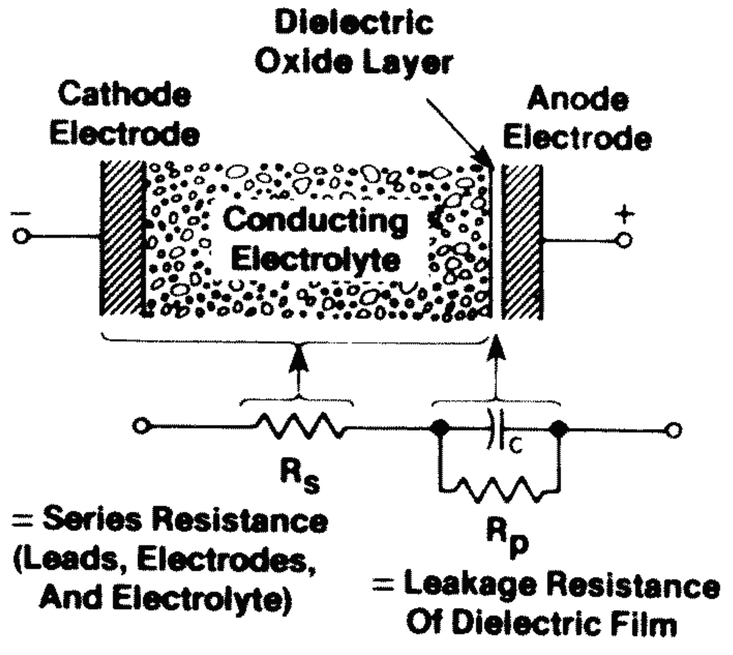

Fig. G — Construction of an electrolytic capacitor and its equivalent circuit.

A Capacitor Is More Than A Capacitor

An ideal capacitor is defined as "a device consisting of two electrodes, separated by a dielectric, for introducing capacitance into an electric circuit." Unfortunately, we don't work with ideal components. The capacitors we encounter every day in our service work are much more complex than this simple definition. In an actual capacitor, a certain amount of current leaks through the dielectric or the insulation. Capacitors have internal series resistances, can exhibit an effect called dielectric absorption, and the capacitance can change in value. If we were to draw a circuit to represent an actual capacitor, it might look like the circuit in Figure H.

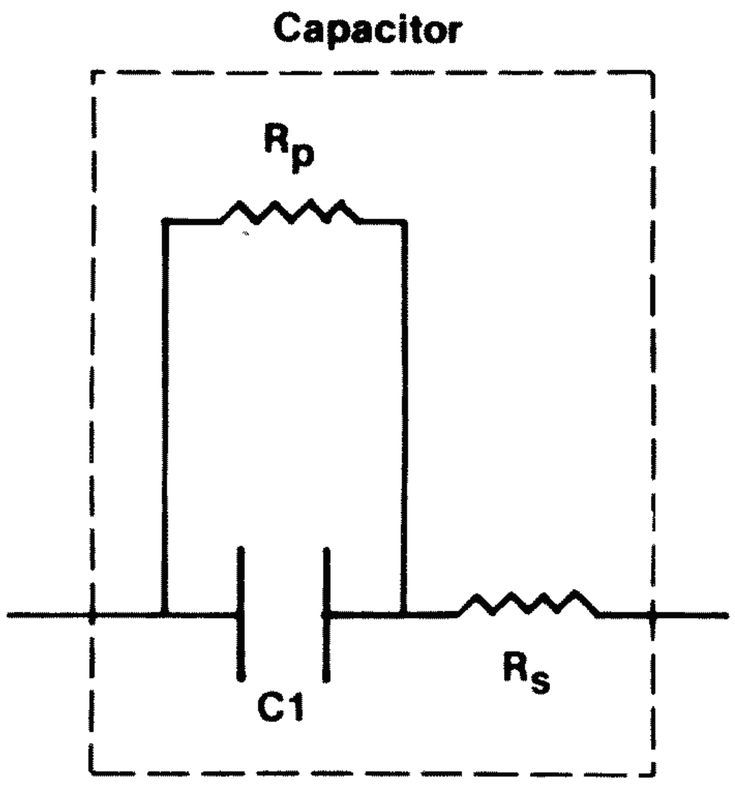

Fig. H — Equivalent circuit of a practical capacitor.

The capacitor C1 represents the true capacitance, the resistance Rp represents the leakage path through the capacitor, and the resistance Rs, called the Effective Series Resistance (ESR) represents all of the combined internal series resistances in the capacitor.

Leakage

One of the most common capacitor failures is caused by current leaking through the capacitor. Some capacitors will show a gradual increase in leakage, while others will change rapidly and even short out entirely. In order to effectively test a capacitor for leakage, it is necessary to test the capacitor at its rated voltage.

When a DC voltage is applied to a capacitor, a certain amount of current will flow through the capacitor. This current is called the leakage current and is the result of imperfections in the dielectric. Whenever this leakage current flows through an electrolytic capacitor, normal chemical processes take place to repair the damage done by the current flow. Heat will be generated from the leakage current flowing through the capacitor and will speed up the chemical repair processes.

As the capacitor ages, the amount of water remaining in the electrolyte will decrease, and the capacitor will be less capable of healing the damage done by the various leakage paths through the dielectric. Thus, as the amount of water in the electrolyte decreases, the capacitor will be less capable of healing the leakage paths and the overall leakage current in the capacitor will ultimately increase. The increase in leakage current will generate additional heat, which will speed up the chemical processes in the capacitor. This process, of course, will use up more water and the capacitor will eventually go into a run-away mode. At some point, the leakage current will finally get large enough to adversely affect the circuit the capacitor is used in.

Dielectric Absorption

One of the most common types of failures of electrolytic capacitors is dielectric absorption. Dielectric absorption is the result of a capacitor remembering a charge that is placed on it. The capacitor cannot be completely discharged and a voltage will reappear after the capacitor has been discharged. Another name for dielectric absorption is battery effect. As this name implies, a capacitor with excessive dielectric absorption will act like a battery in the circuit. This will upset the circuit by changing bias levels. A capacitor with excessive dielectric absorption will also have a different effective capacitance when it is operating in a circuit. Dielectric absorption will not normally show up in film or ceramic capacitors, but if the AUTO-Z test does indicate dielectric absorption the capacitor is likely to fail in use. Dielectric absorption in these capacitors will generally be associated with a high leakage as well.

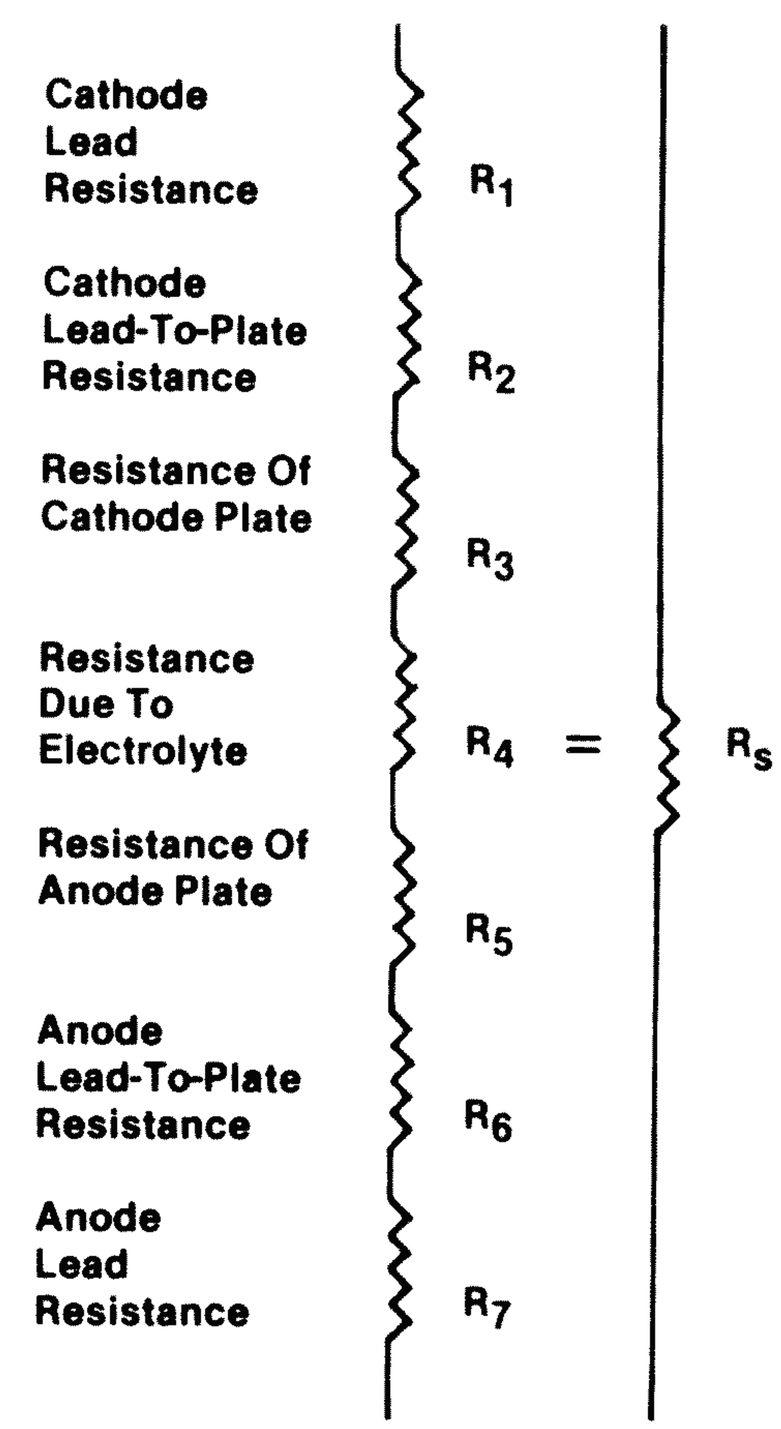

Fig. I — The Effective Series Resistance (ESR) is composed of all the combined internal resistances in the capacitor.

Equivalent Series Resistance

Another problem which develops in capacitors is high Equivalent Series Resistance (ESR). All capacitors have a certain amount of ESR. Sources that contribute to ESR include lead resistance, dissipation in the dielectric material, and foil resistance. Small, non-electrolytic capacitors should have extremely small amounts of ESR. An electrolytic capacitor which has excessive ESR will develop internal heat which greatly reduces the life of the capacitor. In addition, ESR changes the impedance of the capacitor in circuit since it has the same effect as adding an external resistor in series with the component.

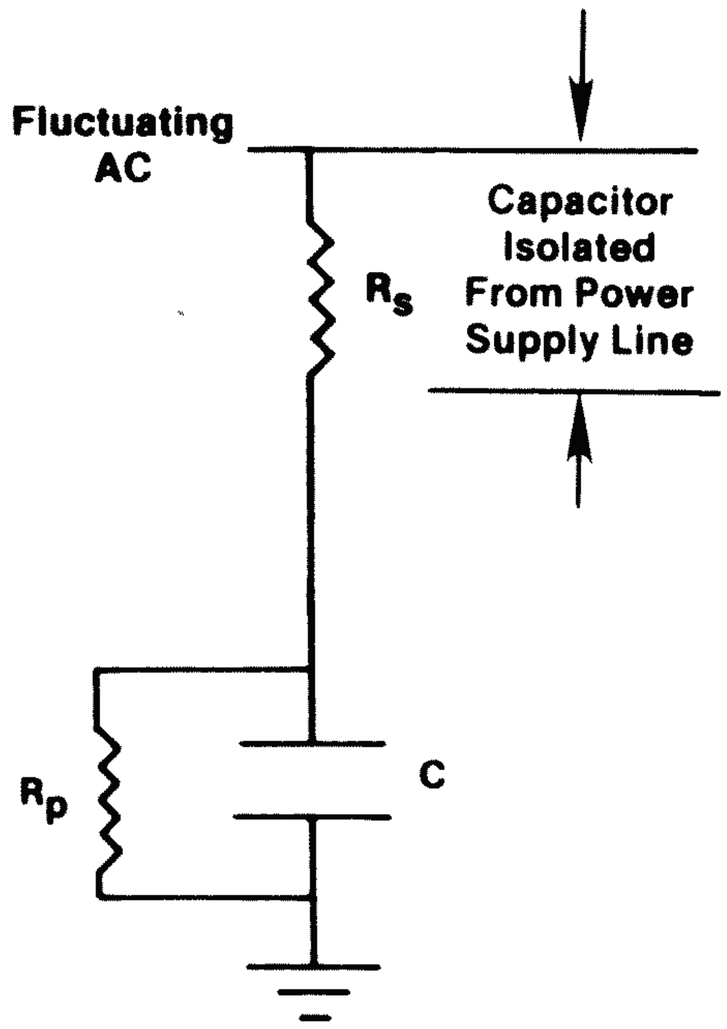

Fig. J — The Equivalent Series Resistance has the result of isolating the capacitor from the power supply line, reducing its filtering capabilities.

Value Change

Capacitors can change value. On some multi-layer foil capacitors, poor welding or soldering of the foil to the leads can cause an open to one of the foils to develop due to stress of voltage or temperature. This can result in a loss of almost one-half of the capacitor's marked capacity. Ceramic disc capacitors can also change value due to fissures or cracks. Small fissures or cracks in the ceramic insulating material can be created by thermal stress from exposure to heat and cold. Sometimes very small fissures develop which do not effect the capacitor until much later. The crack will reduce the capacitor to a smaller value. Although the ceramic is still connected to the leads, the actual value of capacity could be a very small portion of the original value depending upon where the crack occurs. The AUTO-Z will let you know what the value of the capacitor is regardless of its marked value.

Electrolytic capacitors are another example of capacitors that can change value in circuit or on the shelf. As these capacitors dry out, they eventually lose their capacitance due to the failure of the aluminum oxide film making up the dielectric. A change in value in an aluminum electrolytic will often also be preceded by other defects, such as high leakage, high dielectric absorption and/or high internal resistances.

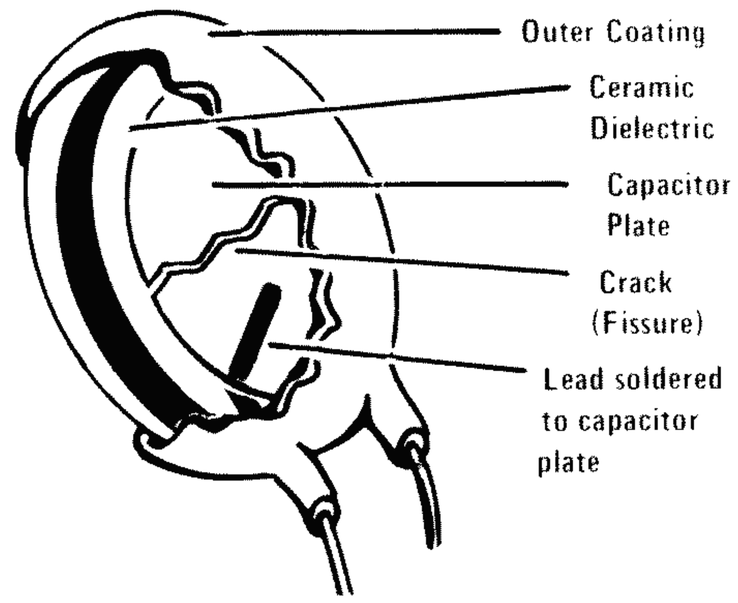

Fig. K — A ceramic disc is made of a silver coated ceramic dielectric which is coated with a protective coating. Large cracks or fissures in the dielectric may develop which change the capacitance value.

As Figure L shows, the ESR is the combined resistances of the connecting leads, the electrode plates, the resistance of the lead to plate connections, and the losses associated with the dielectric. All capacitors have some ESR. Normal amounts of ESR are tolerated by the capacitor and the circuit it is used in. Defects can occur, however, in the capacitor which will increase the ESR in the capacitor. Any increase in ESR can affect the circuit in which the capacitor is used, as well as the capacitor itself.

Excessive ESR caused heat to build up within the capacitor, causing it to fail at an accelerating rate. ESR also reduces the ability of a capacitor to filter AC. As the model in Figure J shows, the series resistance RS isolates the capacitor from the AC it is to filter.

Dipped Tantalum Capacitors

Color	Rated Voltage	Capacitance in Picofarads 1st Figure	2nd Figure	Multiplier
Black	4	0	0	—
Brown	6	1	1	—
Red	10	2	2	—
Orange	15	3	3	—
Yellow	20	4	4	10,000
Green	25	5	5	100,000
Blue	35	6	6	1,000,000
Violet	50	7	7	10,000,000
Gray	—	8	8	—
White	3	9	9	—

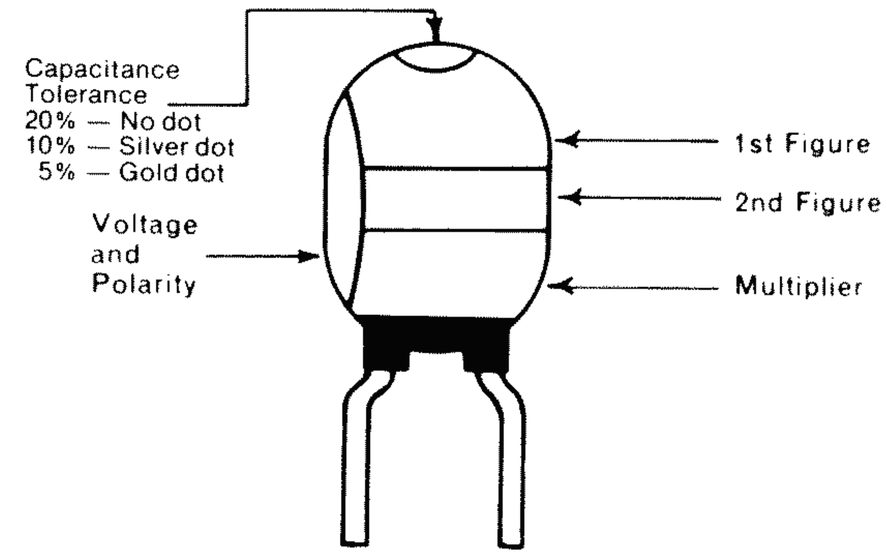

Ceramic Disc Capacitors

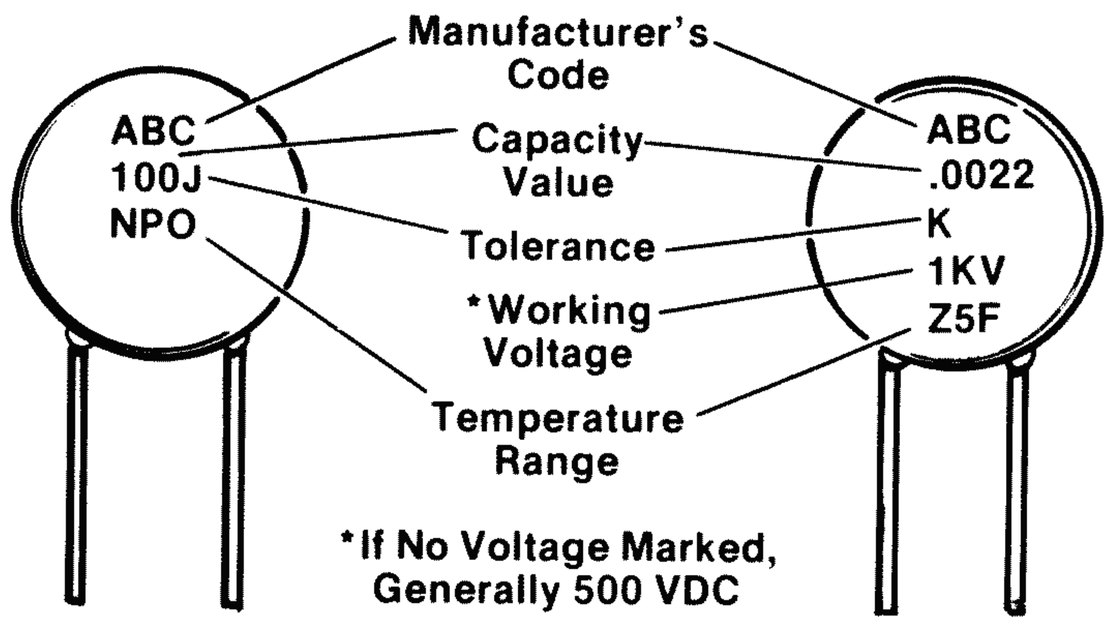

Typical Ceramic Disc Capacitor Markings

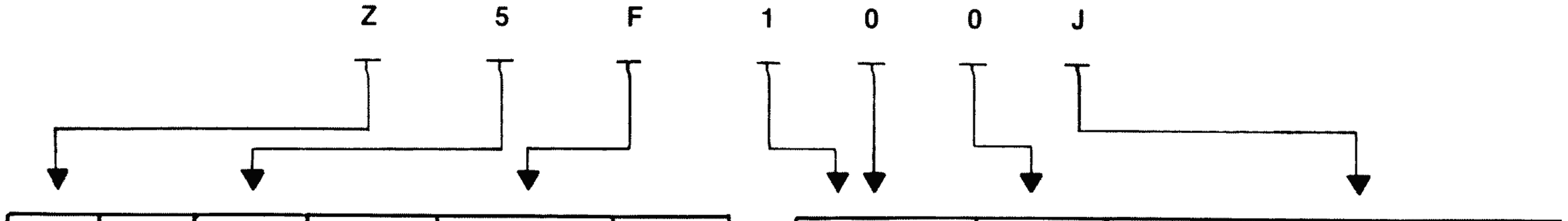

Low Temp.	Letter Symbol	High Temp.	Numerical Symbol	Max. Capac. Change Over Temp. Range	Letter Symbol
+ 10°C	Z	+ 45°C	2	+ 1.0%	A
-30°C	Y	+ 65°C	4	± 1.5%	B
-55°C	X	+ 85°C	5	± 1.1%	C
		+ 105°C	6	± 3.3%	D
		+ 125°C	7	± 4.7%	E
				± 7.5%	F
				± 10.0%	P
				± 15.0%	R
				± 22.0%	S
				+ 22%, -33%	T
				+ 22%, -56%	U
				+ 22%, -82%	V

Temperature Range Identification of Ceramic Disc Capacitors

1st & 2nd Fig. of Capacitance	Multiplier	Numerical Symbol	Tolerance on Capacitance	Letter Symbol
	1	0		
	10	1		
	100	2	± 5%	J
	1,000	3	± 10%	K
	10,000	4	± 20%	M
	100,000	5	+ 100%, -0%	P
		—	+ 80%, -20%	Z
		—		
	.01	8		
	.1	9		

Capacity Value and Tolerance of Ceramic Disc Capacitors

Film Type Capacitors

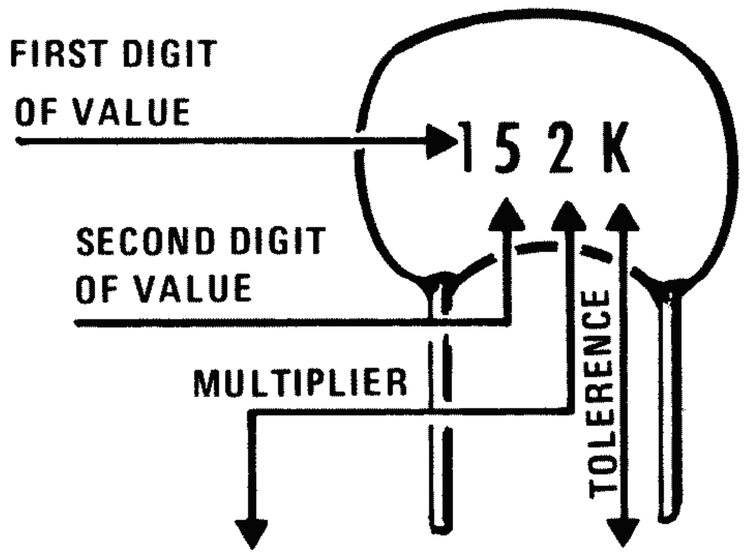

MULTIPLIER		TOLERANCE OF CAPACITOR		
For the Number	Multiplier	Letter	10 pF or Less	Over 10 pF
0	1	B	± 0.1 pF	
1	10	C	± .25 pF	
2	100	D	± 0.5 pF	
3	1,000	F	± 1.0 pF	± 1%
4	10,000	G	± 2.0 pF	± 2%
5	100,000	H		± 3%
		J		± 5%
8	0.01	K		± 10%
9	0.1	M		± 20%

EXAMPLES:
152K = 15 x 100 = 1500 pF or .0015 uF, ± 10%
759J = 75 x 0.1 = 7.5 pF, ± 5%

NOTE: The letter "R" may be used at times to signify a decimal point; as in: 2R2 = 2.2 (pF or uF).

Ceramic Feed Through Capacitors

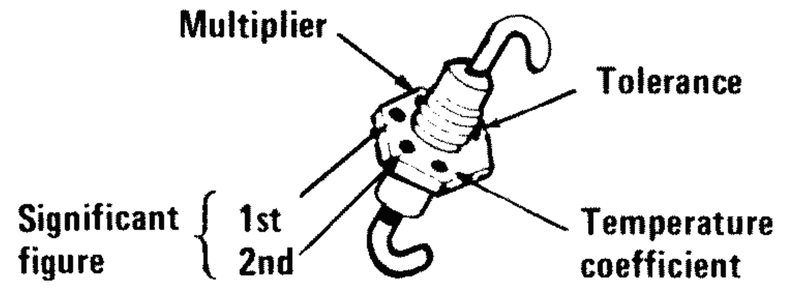

Color	Significant Figure	Multiplier	Tolerance 10 pF or Less	Tolerance Over 10 pF	Temperature Coefficient
Black	0	1	2 pF	20%	0
Brown	1	10	0.1 pF	1%	N30
Red	2	100	—	2%	N60
Orange	3	1,000	—	2.5%	N150
Yellow	4	10,000	—	—	N220
Green	5	—	5 pF	5%	N330
Blue	6	—	—	—	N470
Violet	7	—	—	—	N750
Gray	8	0.001	0.025 pF	—	P30
White	9	0.1	1 pF	10%	+ 120 to -750 (RETMA) + 500 to -330 (JAN)
Gold	—	—	—	—	P100
Silver	—	—	—	—	Bypass or coupling

Postage Stamp Mica Capacitors

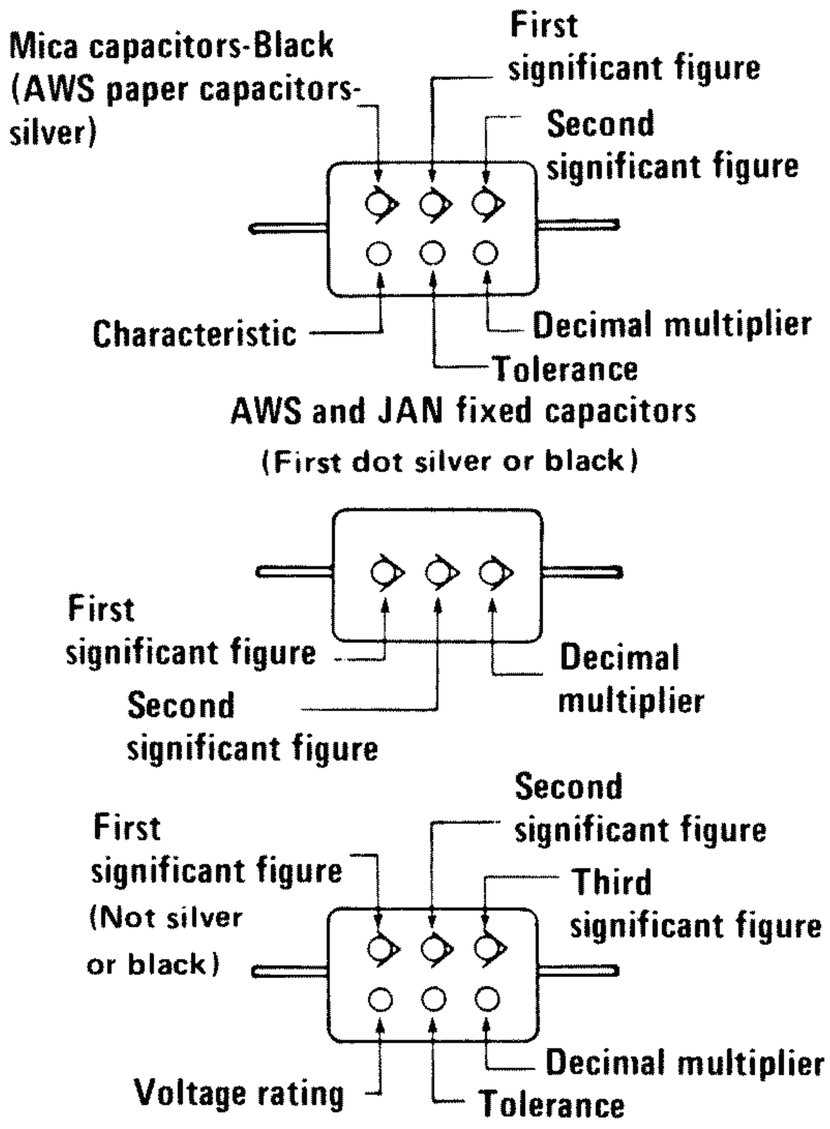

Color	Significant Figure	Multiplier	Tolerance (%)	Voltage Rating
Black	0	1	–	—
Brown	1	10	1	100
Red	2	100	2	200
Orange	3	1,000	3	300
Yellow	4	10,000	4	400
Green	5	100,000	5	500
Blue	6	1,000,000	6	600
Violet	7	10,000,000	7	700
Gray	8	100,000,000	8	800
White	9	1,000,000,000	9	900
Gold	–	0.1	5	1000
Silver	–	0.01	10	2000
No color	–	—	20	500

Standard Button Mica

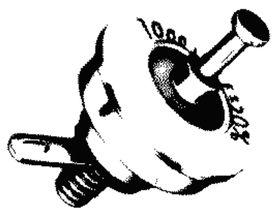

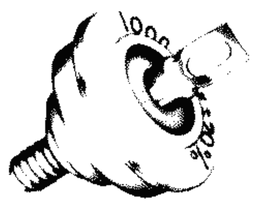

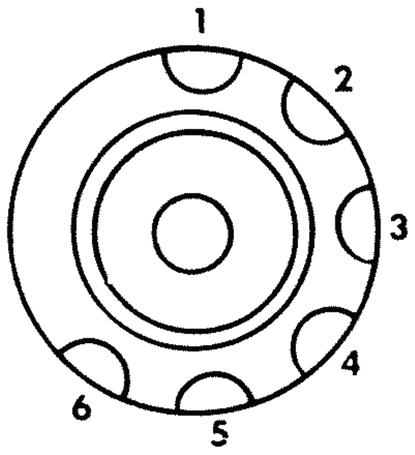

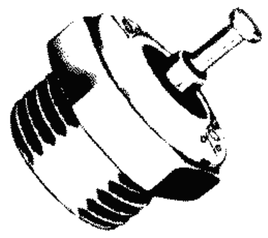

1st DOT	2nd and 3rd DOTS		4th DOT	5th DOT		6th DOT
Identifier	Capacitance in pF		Multiplier	Capacitance Tolerance		Temp. Characteristic
	Color	1st & 2nd Sig. Figs.		Percent	Letter Symbol	
Black	Black Brown	0 1	1 10	± 20% ± 1%	F F	
NOTE: Identifier is omitted if capacitance must be specified to three significant figures.	Red Orange	2 3	100 1000	± 2% or ± 1 pF ± 3%	G or B H	
	Yellow Green	4 5				+ 100
	Blue Violet	6 7				-20 PPM/°C above 50 pF
	Gray White Gold	8 9	0.1	± 5%	J	± 100 PPM/°C below 50 pF
	Silver			± 10%	K	

Radial or Axial Lead Ceramic Capacitors
(6 Dot or Band System)

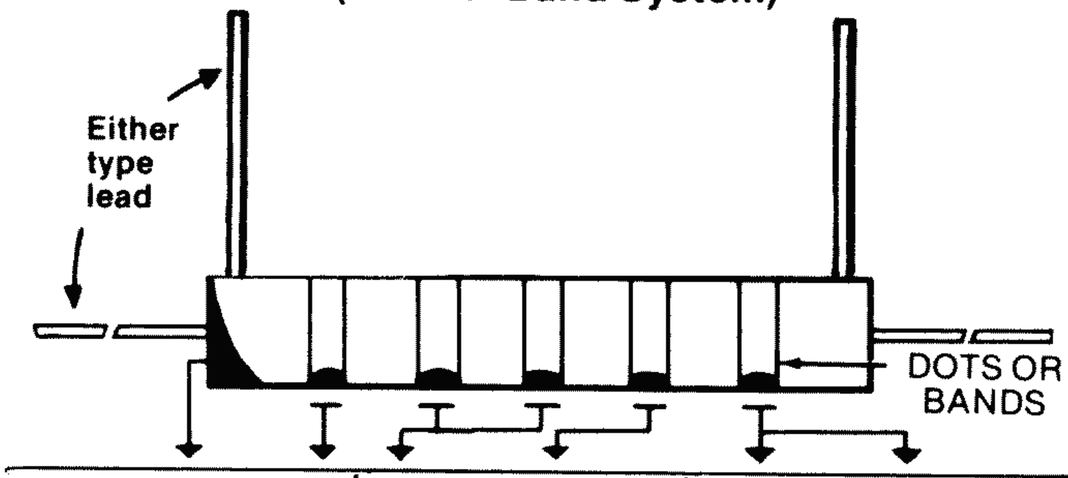

Temp. Coefficient			Capacitance			Nominal Capacitance Tolerance		
T.C.	1st Color	2nd Color	1st and 2nd Sig. Fig.	Multiplier	Color	10 pF or Less	Over 10 pF	Color
P100 P030	Red Green	Violet Blue	0 1	1 10	Black Brown	± 2.0 pF ± 0.1 pF	± 20% ± 1%	Black Brown
NP0 N030	Black Brown		2 3	100 1,000	Red Orange		± 2% ± 3%	Red Orange
N080 N150	Red Orange		4 5	10,000	Yellow Green	± 0.5 pF	+ 100% -0% ± 5%	Yellow Green
N220 N330	Yellow Green		6 7		Blue Violet			Blue Violet
N470 N750	Blue Violet		8 9	.01 .1	Gray White	± 0.25 pF ± 1.0 pF	+ 80% -20% ± 10%	Gray White
N1500 N2200	Orange Yellow	Orange Orange						
N3300 N4200	Green Green	Orange Green						
N4700 N5600	Blue Green	Orange Black						
N330 ± 500	White							
N750 ± 1000	Gray							
N3300 ± 2500	Gray	Black						

5 Dot or Band Ceramic Capacitors
(one wide band)

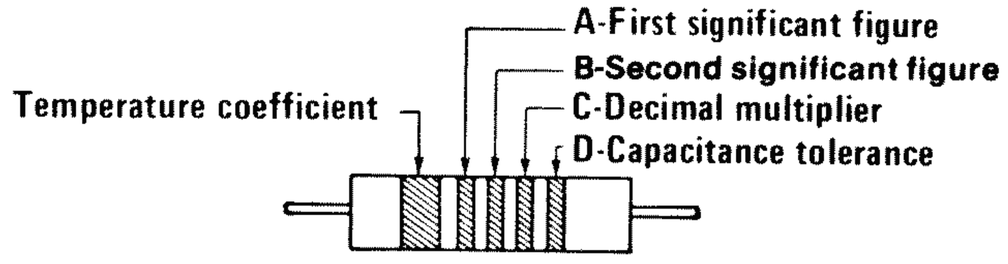

Fixed ceramic capacitors, 5 dot or band system

Color Code for Ceramic Capacitors

Color	1st & 2nd Significant Figure	Multiplier	Capacitance Tolerance		Temp. Coeff.
			Over 10 pF	10 pF or Less	
Black Brown	0 1	1 10	± 20% ± 1%	2.0 pF	0 N30
Red Orange	2 3	100 1000	± 2%		N80 N150
Yellow Green	4 5				N220 N330
Blue Violet	6 7		± 5%	0.5 pF	N470 N750
Gray White	8 9	0.01 0.1	± 10%	0.25 pF 1.0 pF	P 30 P500

5 Band Ceramic Capacitors
(all bands equal size)

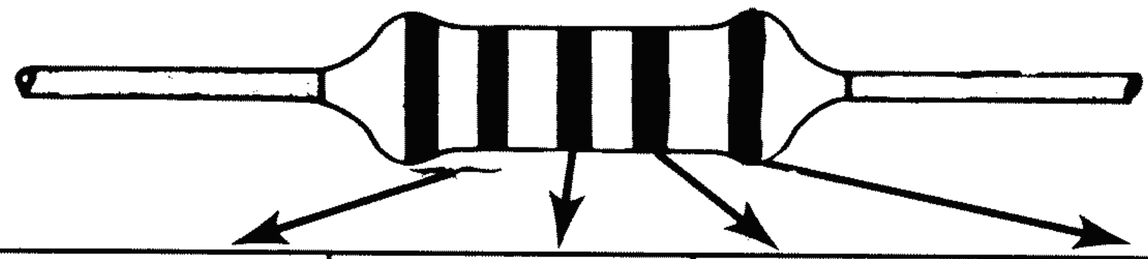

color	1st, 2nd Band	Multiplier	Tolerance	Characteristic
Black Brown	0 1	1 10	±20% (M)	NPO Y5S
Red Orange	2 3	100 1K		Y5T N150
Yellow Green	4 5	10K	 N330	N220
Blue Violet	6 7			N470 N750
Grey White	8 9		±30% (N) SL (GP)	Y5R
Gold Silver	- -	0.1 0.01	±5% (J) ±10% (K)	Y5F Y5P

Tubular Encapsulated RF Chokes

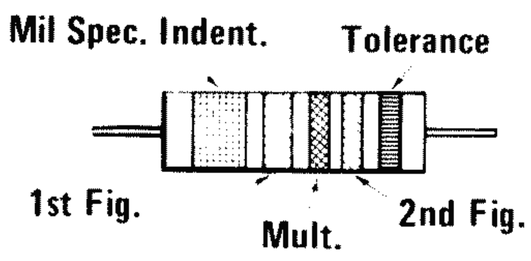

Color	*Figure*	*Multiplier*	*Tolerance*
Black	0	1	
Brown	1	10	
Red	2	100	
Orange	3	1,000	
Yellow	4		
Green	5		
Blue	6		
Violet	7		
Gray	8		
White	9		
None			20%
Silver			10%
Gold			5%

Multiplier is the factor by which the two color figures are multiplied to obtain the inductance value of the choke coil in uH.

Values will be in uH.

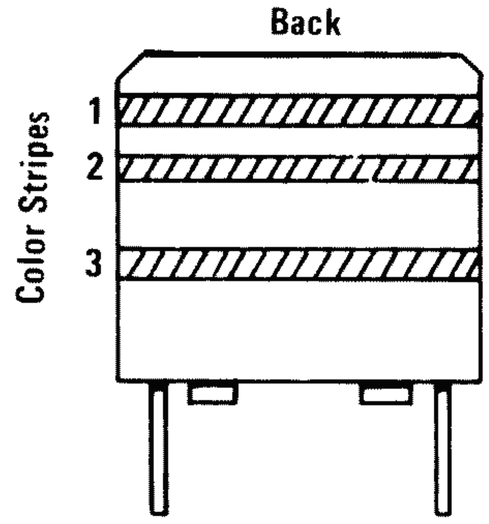

"POSTAGE STAMP" FIXED INDUCTORS

Color	1st Digit 1st Strip	2nd Digit 2nd Strip	Multiplier 3rd Strip
Black or (Blank)	0	0	1
Brown	1	1	10
Red	2	2	100
Orange	3	3	1,000
Yellow	4	4	10,000
Green	5	5	100,000
Blue	6	6	
Violet	7	7	
Gray	8	8	
White	9	9	
Gold			X.1
Silver			X.01

GLOSSARY

Aging — operating a component or instrument at controlled conditions for time and temperature to screen out weak or defective units and, at the same time, stabilize the good units.

Anode — the positive electrode of a capacitor or diode.

Capacitance — the measure of the size of a capacitor. Usually expressed in microfarads and picofarads. Determined by the size of the plates, and the dielectric material.

Capacitive reactance — the opposition to the flow of a pulsating DC voltage or AC voltage. Measured in ohms.

Capacitor — an electronic component consisting of two metal plates separated by a dielectric. Can store and release electrical energy, block the flow of DC current or filter out or bypass AC currents.

Cathode — the negative electrode of a capacitor or diode.

Charge — the quantity of electrical energy stored or held in a capacitor.

Clearing — the removal of a flaw or weak spot in the dielectric of a metalized capacitor. The stored energy in the capacitor vaporizes the material in the immediate vicinity of the flaw. Also called self-healing or self-clearing.

COG — same as NPO. Very small capacity charge for large temperature changes.

Coil — an inductor wound in a spiral or circular fashion. Can be wound on a form or without a form such as an air coil.

CV product — the capacitance of a capacitor multiplied by its working voltage. Used when determining the leakage allowable in electrolytic capacitors. The CV product is also equal to the charge that a capacitor can store at its maximum voltage.

Dielectric — the insulating or non-conducting material between the plates of a capacitor where the electric charge is stored. Typical dielectrics include air, impregnated paper, plastic films, oil, mica, and ceramic.

Dielectric absorption — the measure of the inability of a capacitor to completely discharge. The charge that remains after a determined discharge time is expressed in a percentage of the original charge. Also called "Capacitor Memory" or "Battery Action".

Dielectric constant — the ratio of capacitance between a capacitor having a dry air dielectric and the given material. A figure for determining the efficiency of a given dielectric material. The larger the dielectric constant, the greater the capacity with a given size plate.

Disc capacitor — small single layer ceramic capacitor consisting of disc of ceramic dielectric with silver deposited on both sides as the plate. The ceramic material can be of different compositions to give different temperature curves to the capacitor.

Dissipation factor (DF) — the ratio of the effective series resistance of a capacitor compared to its reactance at a given frequency, generally given in percent.

Electrolyte — a current conducting liquid or solid between the plates or electrodes of a capacitor with at least one of the plates having an oxide or dielectric film.

Electrolytic capacitor (aluminum) — a capacitor consisting of two conducting electrodes of pure aluminum, the anode having an oxide film which acts as the dielectric. The electrolyte separates the plates.

Equivalent series resistance (ESR) — All internal series resistances of a capacitor are lumped into one resistor and treated as one resistor at one point in the capacitor.

Farad — the measure or unit of capacity. Too large for electronic use and is generally measured in microfarads or picofarads.

Fissures — cracks in the ceramic dielectric material of disc capacitor, most often caused by thermal shock. Some small fissures may not cause failure for a period of time until exposed to great thermal shock or mechanical vibration for a period of time.

Fixed capacitor — a capacitor designed with a specific value of capacitance that cannot be changed.

Gimmick — a capacitor formed by two wires or other conducting materials twisted together or brought into close proximity of each other.

GMV — Guaranteed Minimum Value. The smallest value this ceramic capacitor will have. Its value could be much higher.

Henry — The unit of the measure of inductance. Also expressed in microhenry and millihenry.

Inductor — a device consisting of one or more windings with or without a magnetic material core or introducing inductance into a circuit.

Inductance — the property of a coil or transformer which induces an electromagnetic force in that circuit or a neighboring circuit upon application of an alternating current.

Inductive reactance — the opposition of an inductor to an alternating or pulsating current.

Impedance — the total opposition of a circuit to the flow of an alternating or pulsating current.

Insulation resistance — the ratio of the DC working voltage and the resulting leakage current through the dielectric. Generally a minimum value is specified, usually in the several thousand megohms range.

Iron core — the central portion of a coil or transformer. Can be a powdered iron core as in small coils used in RF to the large iron sheets used in power transformers.

Leakage current — stray direct current flowing through the dielectric or around it in a capacitor when a voltage is applied to its terminals.

Metalized capacitor — one in which a thin film of metal has been vacuum plated on the dielectric. When a breakdown occurs, the metal film around it immediately burns away. Sometimes called a self-healing capacitor.

Monolithic ceramic capacitor — a small capacitor made up of several layers of ceramic dielectric separated by precious metal electrodes.

Mutual inductance — the common property of two inductors whereby the induced voltage from one is induced into the other. The magnitude is dependent upon the spacing.

NPO — an ultra stable temperature coefficient in a ceramic disc capacitor. Derived from "negative-positive-zero". Does not change capacity with temperature changes.

Padder — a high capacity variable capacitor placed in series with a fixed capacitor to vary the total capacity of the circuit by a small amount.

Power factor — the ratio of the effective resistance of a capacitor to its impedance.

Reactance — the opposition of a capacitor or inductor to the flow of an AC current or a pulsating DC current.

Self-healing — term used with metalized foil capacitors.

Solid tantalum capacitor — an electrolytic capacitor with a solid tantalum electrolyte instead of a liquid. Also called a solid electrolyte tantalum capacitor.

Surge voltage — the maximum safe voltage in peaks to which a capacitor can be subjected to and remain within the operating specifications. This is not the working voltage of the capacitor.

Temperature coefficient (TC) — the changes in capacity per degree change in temperature. It can be positive, negative, or zero. Expressed in parts per million per degree centigrade for linear types. For non-linear types, it is expressed as a percent of room temperature.

Time constant — the number of seconds required for a capacitor to reach 63.2% of its full charge after a voltage is applied. The time constant is the capacity in farads times the resistance in ohms is equal to seconds ($T = RC$).

Trimmer — a low value variable capacitor placed in parallel with a fixed capacitor of higher value so that the total capacity of the circuit may be adjusted to a given value.

Variable capacitor — a capacitor that can be changed in value by varying the distance between the plates or the useful area of its plates.

Voltage rating — see working voltage.

Wet (slug) tantalum capacitor — an electrolytic capacitor having a liquid cathode.

Working voltage — the maximum DC voltage that can be applied to a capacitor for continuous operation at the maximum rated temperature.

Rear Panel Features

12. BATTERY COMPARTMENT COVER - Provides access to the (optional) BY242 rechargeable battery.

13. INTERFACE ACCESSORY JACK - Allows the (optional) IB72 IEEE 488 Bus Interface Accessory (26) to be connected to feed LC102 readings to an automated measuring system.

14. TEST BUTTON HOLD DOWN ROD HOLDER - Holds TEST BUTTON HOLD DOWN ROD (19) when not in use.

15. 39G144 TEST LEAD ADAPTER MOUNTING CLIP.

16. POWER INPUT - Connects to supplied PA251 POWER ADAPTER (21) for 110V AC operation, or to PA252 for 220V AC operation (not pictured).

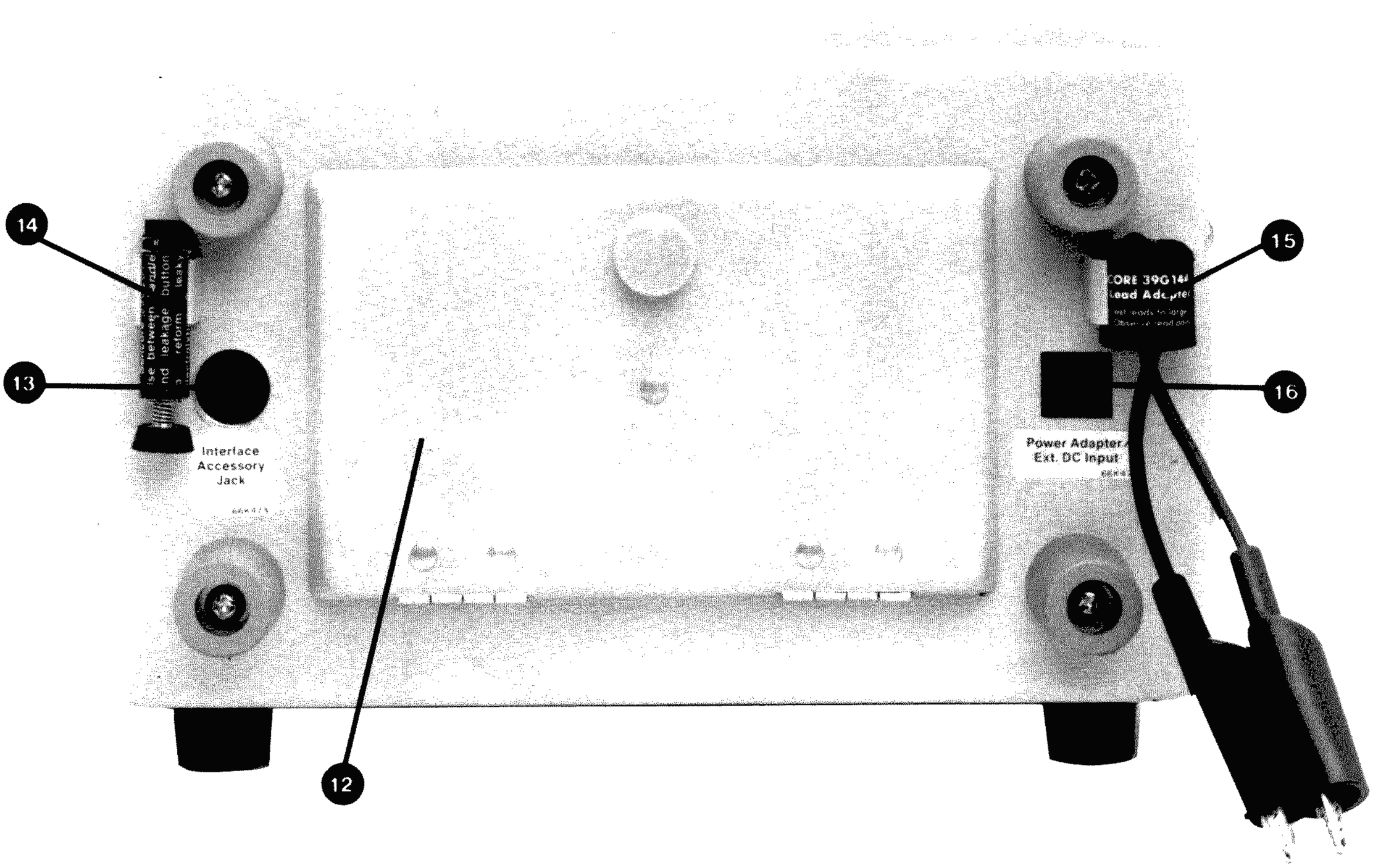

Fig. 3 — Location of rear panel features.

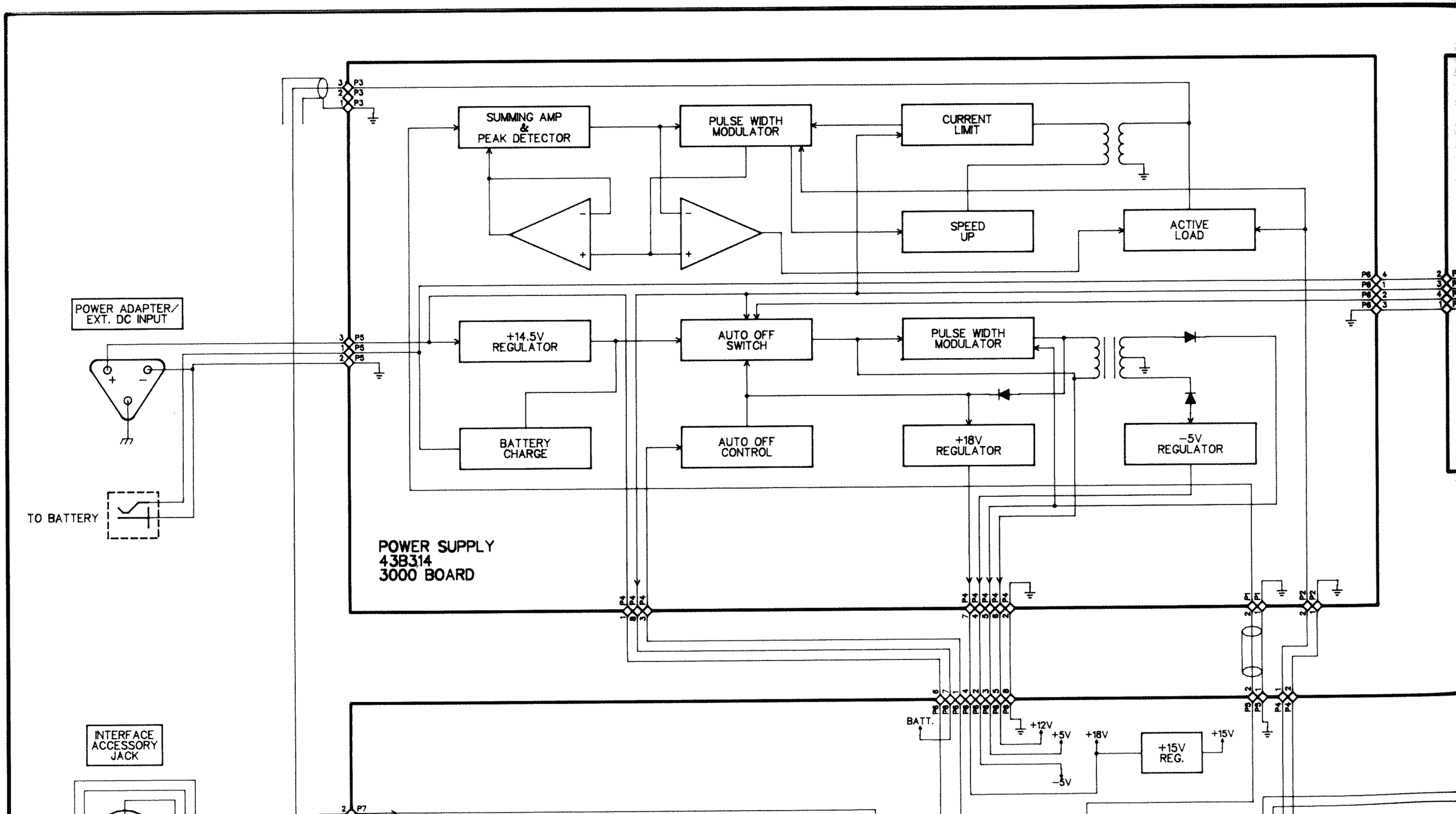
SUMMING AMP & PEAK DETECTOR
PULSE WIDTH MODULATOR
CURRENT LIMIT
SPEED UP
ACTIVE LOAD
POWER ADAPTER/ EXT. DC INPUT
+14.5V REGULATOR
AUTO OFF SWITCH
PULSE WIDTH MODULATOR
BATTERY CHARGE
AUTO OFF CONTROL
+18V REGULATOR
-5V REGULATOR
TO BATTERY
POWER SUPPLY
43B314
3000 BOARD
INTERFACE ACCESSORY JACK
BATT.
+12V
+5V
+18V
+15V REG.
+15V
-5V

LC102 AUTO-Z BLOCK DIAGRAM

WITCHES
38315
000 BOARD

POWER

LEAKAGE

CURRENT

SW1-A

SW3

OHMS

47K

LEAD ZERO

SW1-B

OPEN

SW2

SHORT

ON & BATT TEST

AUTO OFF

SW1-C

OFF

P5

P4

P3

P2

P1

P1 9
P1 11

DISPLAY
43B398
1000 BOARD

+5V

CR2

FUSE BLOWN LED

2 P5
1 P5

CR1

WARNING LED

2 P3
1 P3

9 P1
11 P1
15 P1
13 P1

5 P2
4 P2
3 P2
2 P2
1 P2

2 P1
16 P1
18 P1
20 P1
22 P1
24 P1
17 P1

WAIT
OPEN
SHORT

pF uH uA MΩ
uF mH KΩ GOOD
RINGS % Ω BAD

VOLTS

DRIVER

DRIVER

DRIVER

BACKPLANE OSC.
&
LED FLASHER

TYPE
SELECT LEDS

TYPE
SELECT LATCH

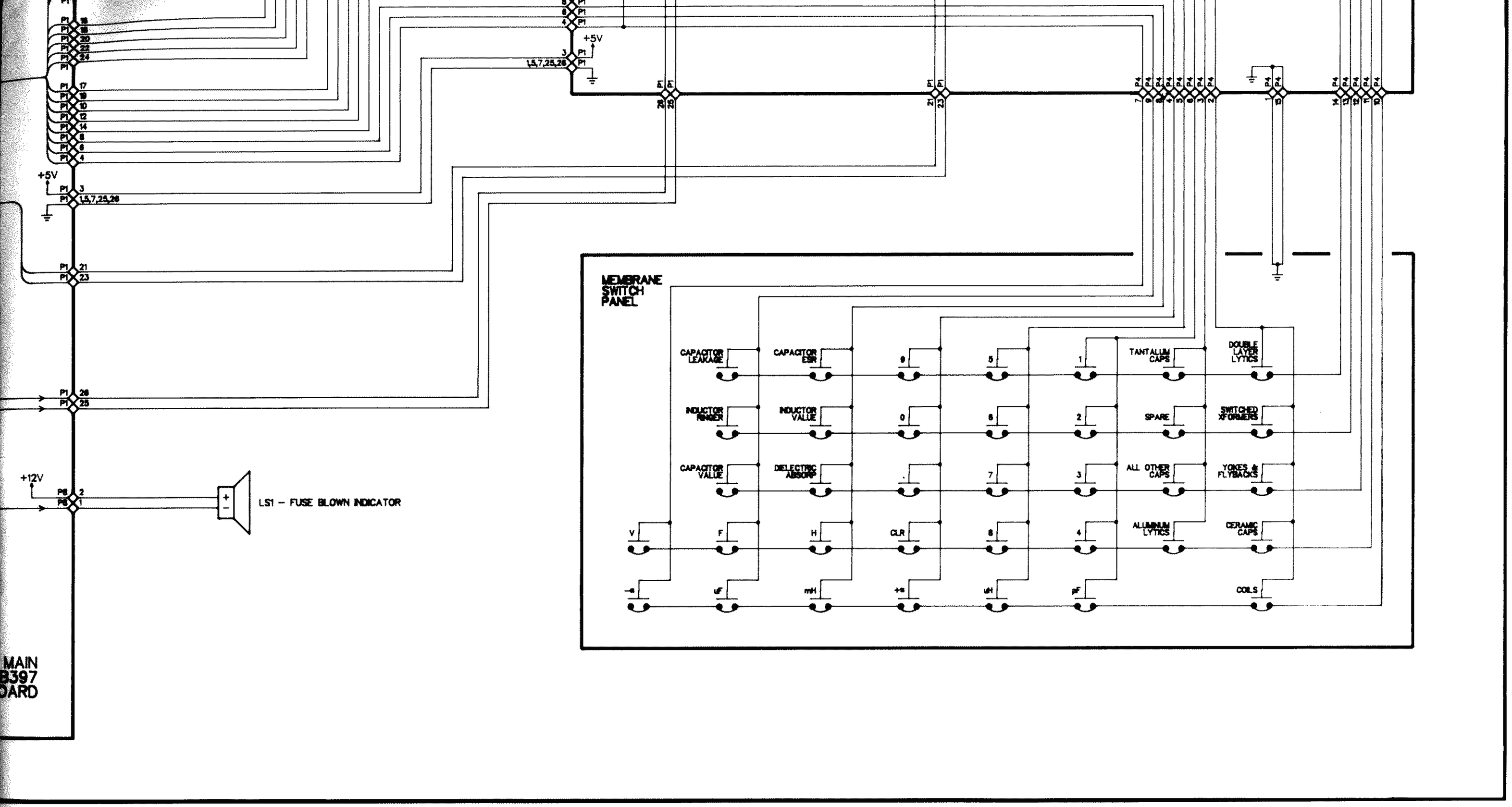
MEMBRANE SWITCH PANEL
CAPACITOR LEAKAGE
CAPACITOR ESR
9
5
1
TANTALUM CAPS
DOUBLE LAYER LYTICS
INDUCTOR RINGER
INDUCTOR VALUE
0
6
2
SPARE
SWITCHED XFORMERS
CAPACITOR VALUE
DIELECTRIC ABSORP
.
7
3
ALL OTHER CAPS
YOKES & FLYBACKS
V
F
H
CLR
8
4
ALUMINUM LYTICS
CERAMIC CAPS
-e
uF
mH
+e
uH
pF
COILS
+5V
P1 3
P1 1,5,7,25,26
P1 17
P1 19
P1 10
P1 12
P1 14
P1 8
P1 6
P1 4
P1 15
P1 18
P1 20
P1 22
P1 24
P1 21
P1 23
P1 26
P1 25
+12V
P8 2
P8 1
LS1 – FUSE BLOWN INDICATOR
P1 28
P1 25
P1 21
P1 23
P4 7
P4 9
P4 4
P4 5
P4 6
P4 3
P4 2
P4 1
P4 13
P4 14
P4 12
P4 11
P4 10
MAIN
8397
OARD

DIAGRAM

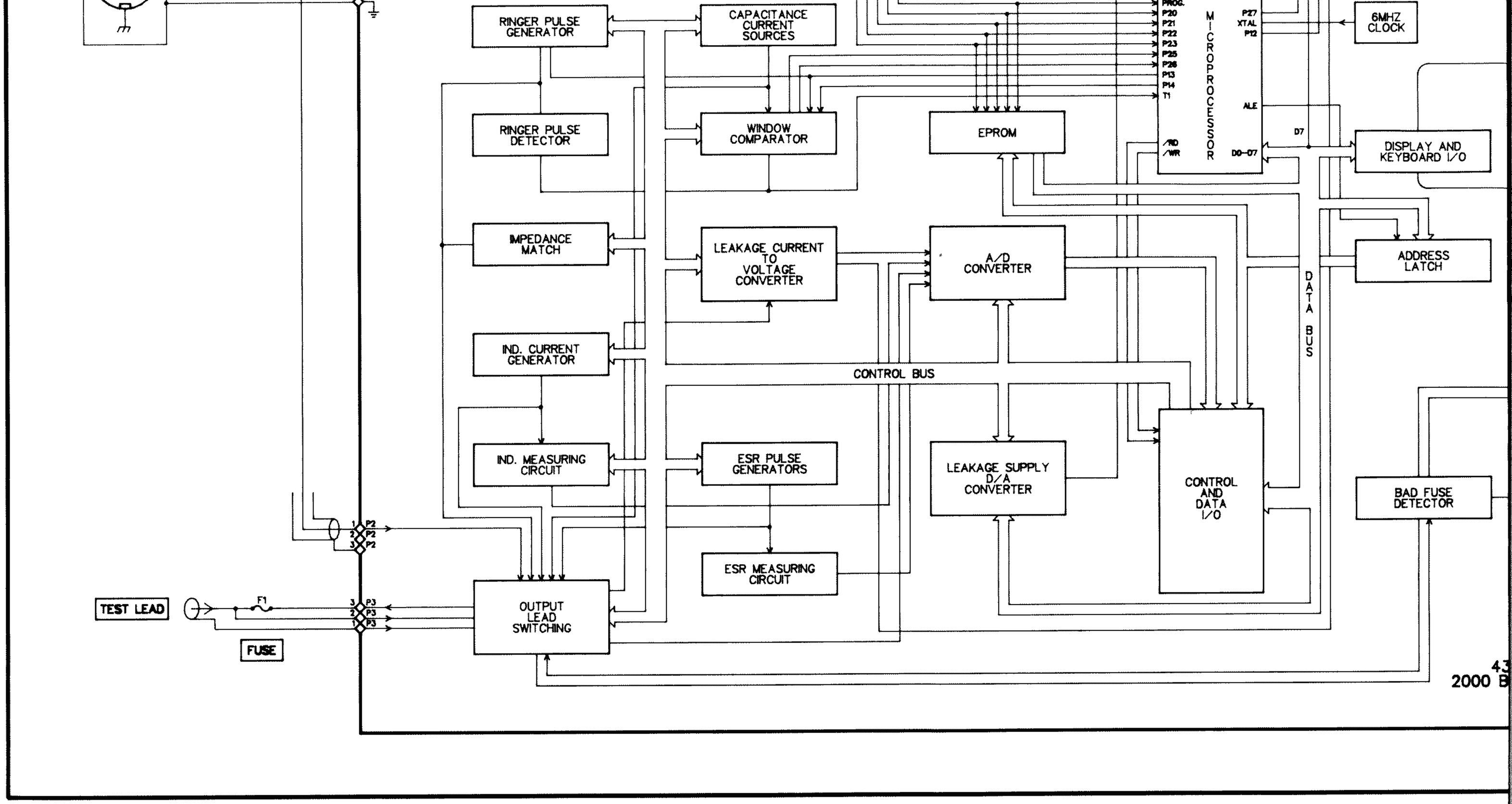
RINGER PULSE GENERATOR
CAPACITANCE CURRENT SOURCES
RINGER PULSE DETECTOR
WINDOW COMPARATOR
EPROM
IMPEDANCE MATCH
LEAKAGE CURRENT TO VOLTAGE CONVERTER
A/D CONVERTER
IND. CURRENT GENERATOR
CONTROL BUS
IND. MEASURING CIRCUIT
ESR PULSE GENERATORS
LEAKAGE SUPPLY D/A CONVERTER
CONTROL AND DATA I/O
ESR MEASURING CIRCUIT
OUTPUT LEAD SWITCHING
TEST LEAD
FUSE
F1
P2
P3
PROG.
P20
P21
P22
P23
P25
P26
P13
P14
T1
/RD
/WR
P27
XTAL
P12
ALE
D0–D7
D7
MICROPROCESSOR
6MHZ CLOCK
DISPLAY AND KEYBOARD I/O
ADDRESS LATCH
DATA BUS
BAD FUSE DETECTOR

DISPLAY
438398
1000 BOARD

MEMBRANE SWITCH PANEL

V
F
H
CAPACITOR VALUE
INDUCTOR NUMBER
CAPACITOR LEAKAGE
G
CLR
DELETE/INS ASSOC#
INDUCTOR VALUE
CAPACITOR ESR
4
8
-
0
5
ALUMINUM CAPS
ALL OTHER CAPS
SPARE
TANTALUM CAPS
CERAMIC CAPS
YOKES & FLYBACKS
SWITCHED XF.ONLY.REG
DOUBLE LAYER LYTICS
LS1 – FUSE BLOWN INDICATOR
+12V
+5V
WARNING LED
CR1
FUSE BLOWN LED
CR2
BACKPLANE OSC. & LED FLASHER
TYPE SELECT LATCH
TYPE SELECT LEDS
DRIVER
DRIVER
DRIVER
WAIT
OPEN
SHORT
pF uH uA MΩ
uF mH KΩ GOOD
RINGS x Ω BAD
VOLTS
SW1-C
OFF
AUTO OFF
BATT TEST
CAL & ZERO
SHORT
SW2
OPEN
SW1-B
LEAD ZERO
47K

POWER ADAPTER/
EXT. DC INPUT

TO BATTERY

+14.5V
REGULATOR

BATTERY
CHARGE

AUTO OFF
SWITCH

AUTO OFF
CONTROL

PULSE WIDTH
MODULATOR

+18V
REGULATOR

−5V
REGULATOR

POWER SUPPLY
43B314
3000 BOARD

BATT.

+12V

+5V

+18V

−5V

+15V
REG.

+15V

INTERFACE
ACCESSORY
JACK

RINGER PULSE
GENERATOR

RINGER PULSE
DETECTOR

IMPEDANCE
MATCH

IND. CURRENT
GENERATOR

IND. MEASURING
CIRCUIT

CAPACITANCE
CURRENT
SOURCES

WINDOW
COMPARATOR

LEAKAGE CURRENT
TO
VOLTAGE
CONVERTER

ESR PULSE
GENERATORS

ESR MEASURING
CIRCUIT

EPROM

A/D
CONVERTER

LEAKAGE SUPPLY
D/A
CONVERTER

CONTROL
AND
DATA
I/O

MICROPROCESSOR

P24
T0
PROG.
P20
P21
P22
P23
P25
P26
P13
P14
T1
/RD
/WR
P27
XTAL
P12
ALE
D0–D7
D7

6MHZ
CLOCK

DISPLAY AND
KEYBOARD I/O

ADDRESS
LATCH

BAD FUSE
DETECTOR

DATA BUS

CONTROL BUS

TEST LEAD

F1

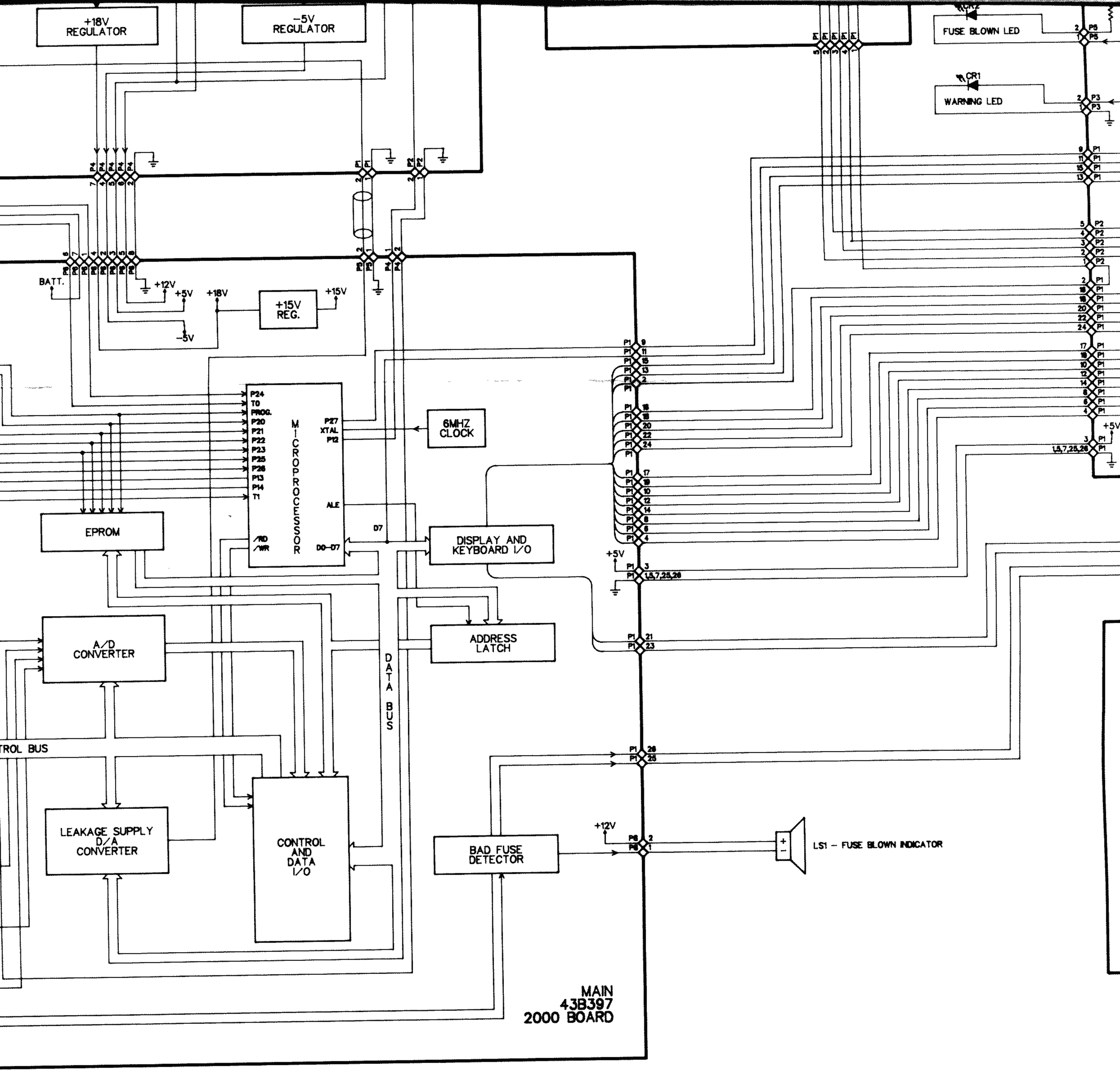

LC102 BLOCK DIAGRAM

CURRENT LIMIT

SPEED UP

ACTIVE LOAD

PULSE WIDTH MODULATOR

+18V REGULATOR

-5V REGULATOR

BATT.

+12V

+5V

+18V

-5V

+15V REG.

+15V

SWITCHES
43B315
4000 BOARD

POWER

SW1-A

47K

SW1-B

SW1-C

ON @ BATT TEST

AUTO OFF

OFF

LEAKAGE

CURRENT

SW3

OHMS

LEAD ZERO

OPEN

SW2

SHORT

P6 4 — 2 P2
P6 1 — 3 P2
P6 2 — 4 P2
P6 3 — 1 P2

P4 P4 P4 P4 P4 P4 P4 P4 — P1 P1 — P2 P2 — P5 P5 P4 P4

CR2

FUSE BLOWN LED

+5V

CR1

WARNING LED

P5 2 — P5 1

P3 2 — P3 1

P1 9 — P1 11 — P1 15 — P1 13

P2 5 — P2 4 — P2 3 — P2 2 — P2 1

P1 2 — P1 16 — P1 18 — P1 20 — P1 22 — P1 24

P1 17 — P1 19 — P1 10 — P1 12 — P1 14 — P1 8 — P1 6 — P1 4

P1 3 — P1 1,5,7,25,26

+5V

P1 3 — P1 1,5,7,25,26

+5V

P1 21 — P1 23

P1 26

P24
T0
PROG.
P20
P21
P22
P23
P25
P26
P13
P14
T1

MICROPROCESSOR

P27
XTAL
P12

ALE

/RD
/WR

D0-D7

D7

6MHZ CLOCK

EPROM

DISPLAY AND KEYBOARD I/O

ADDRESS LATCH

A/D CONVERTER

DATA BUS

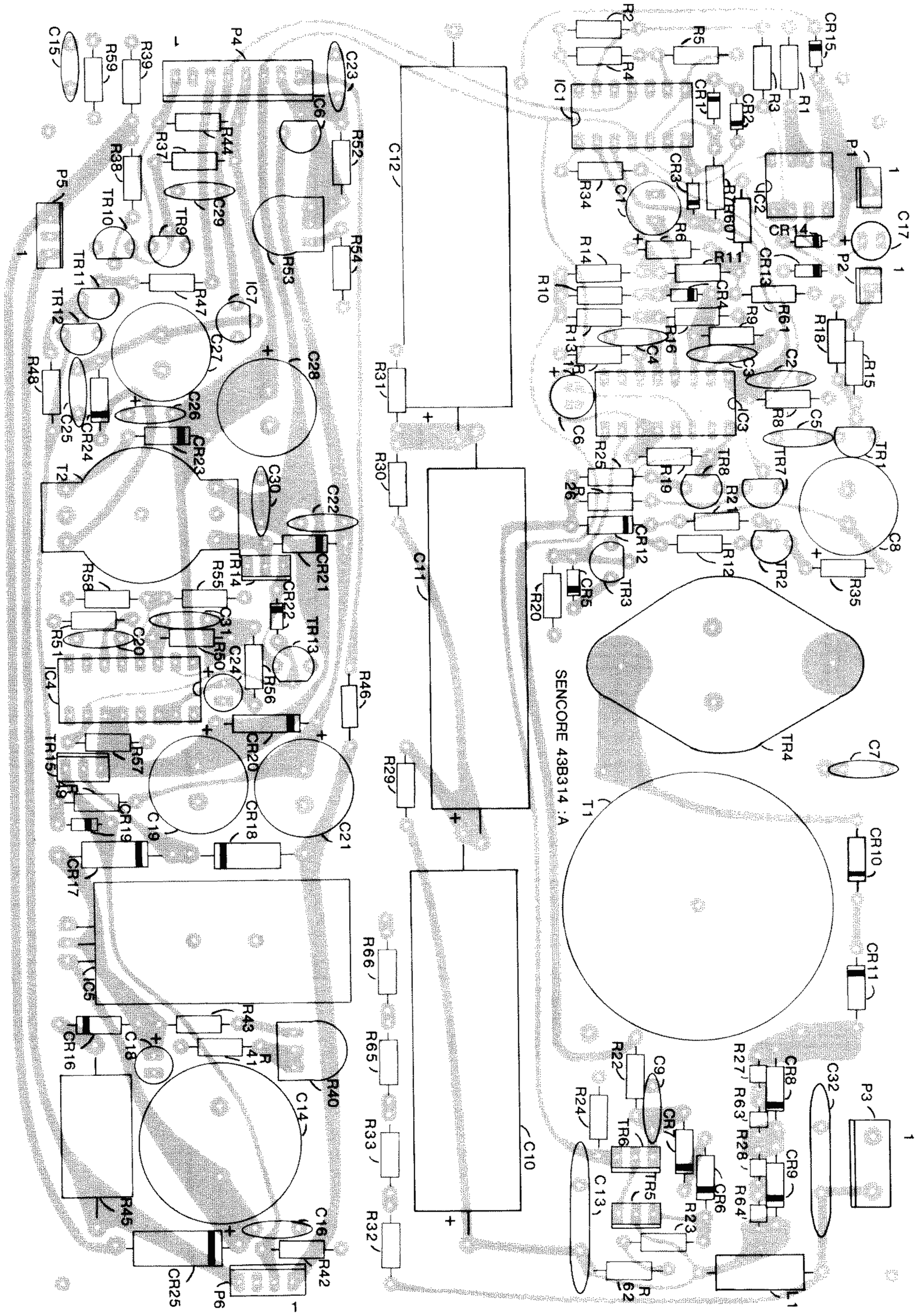

LEAKAGE SUPPLY BOARD (Component Side)

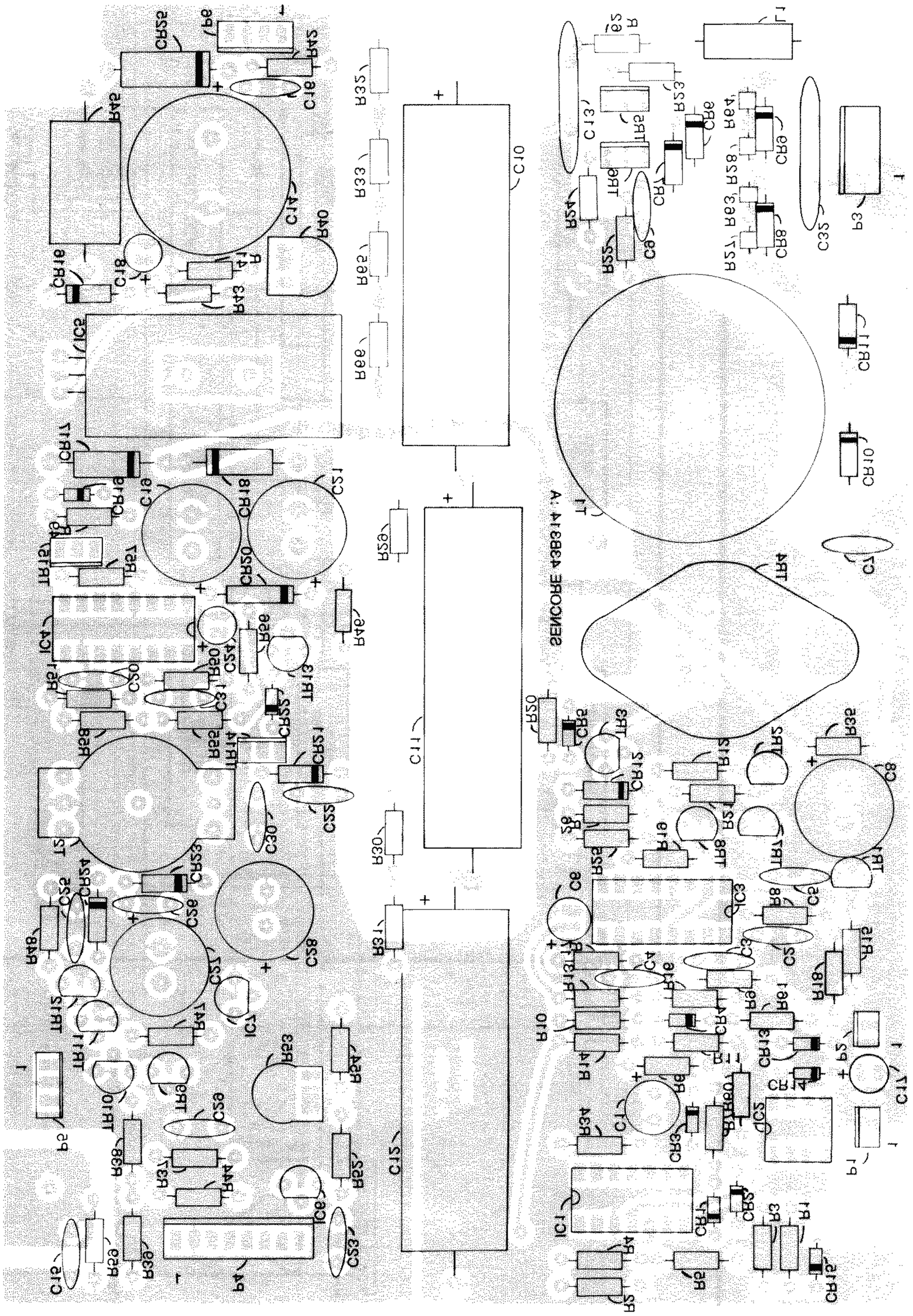

LEAKAGE SUPPLY BOARD (Foil Side)

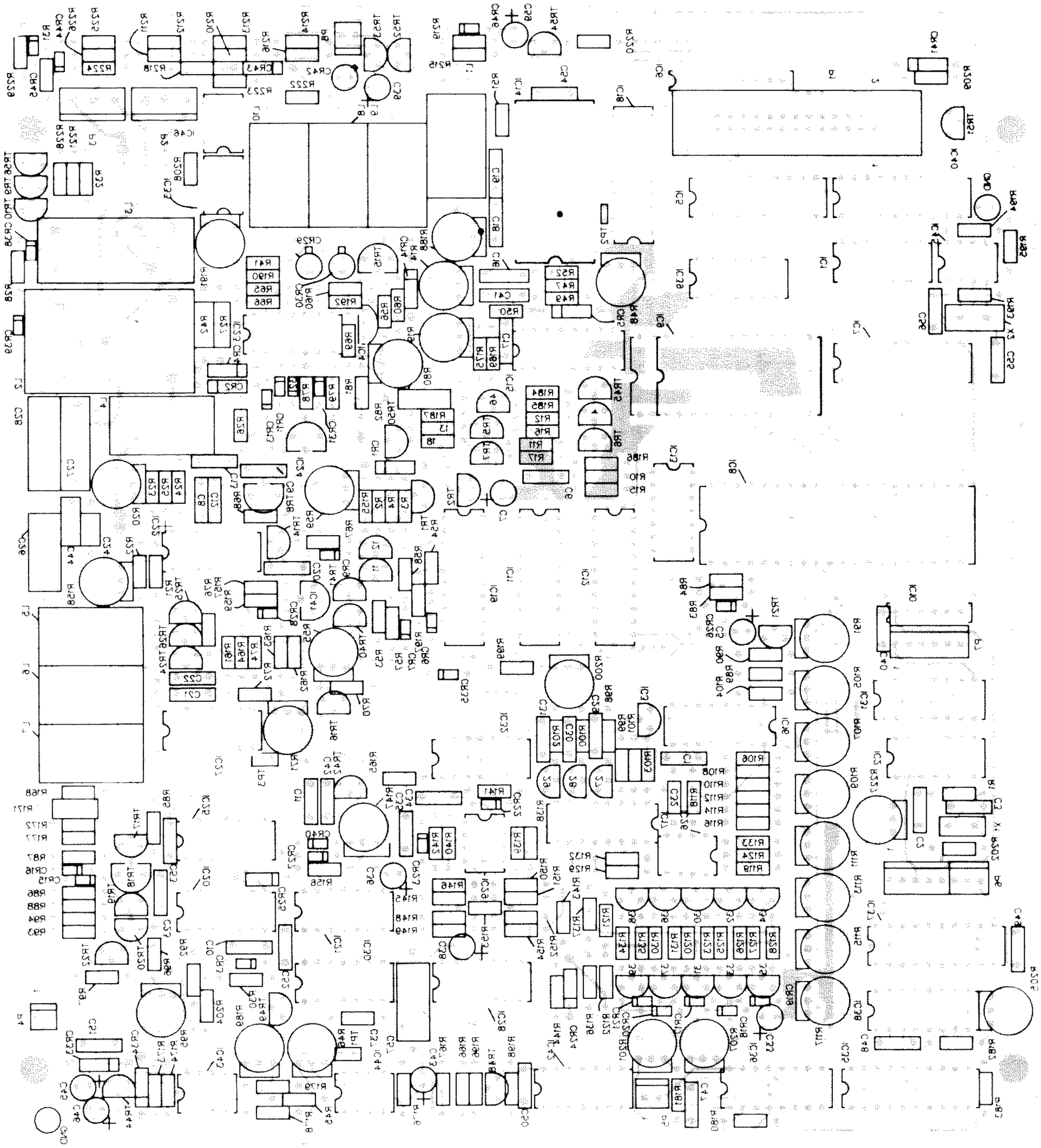

MAIN BOARD (Foil Side)

MAIN BOARD (Component Side)

Toll Free 1-800-SENCORE

SENCORE *innovatively designed with your time in mind.*

3200 Sencore Drive
Sioux Falls, SD 57107
Call Collect 605-339-0100 In SD

This sheet includes P.C. board layouts and Block Diagram.

SHEET 3

LC102

AUTO-Z CAPACITOR—INDUCTOR ANALYZER

Schematic & Parts List

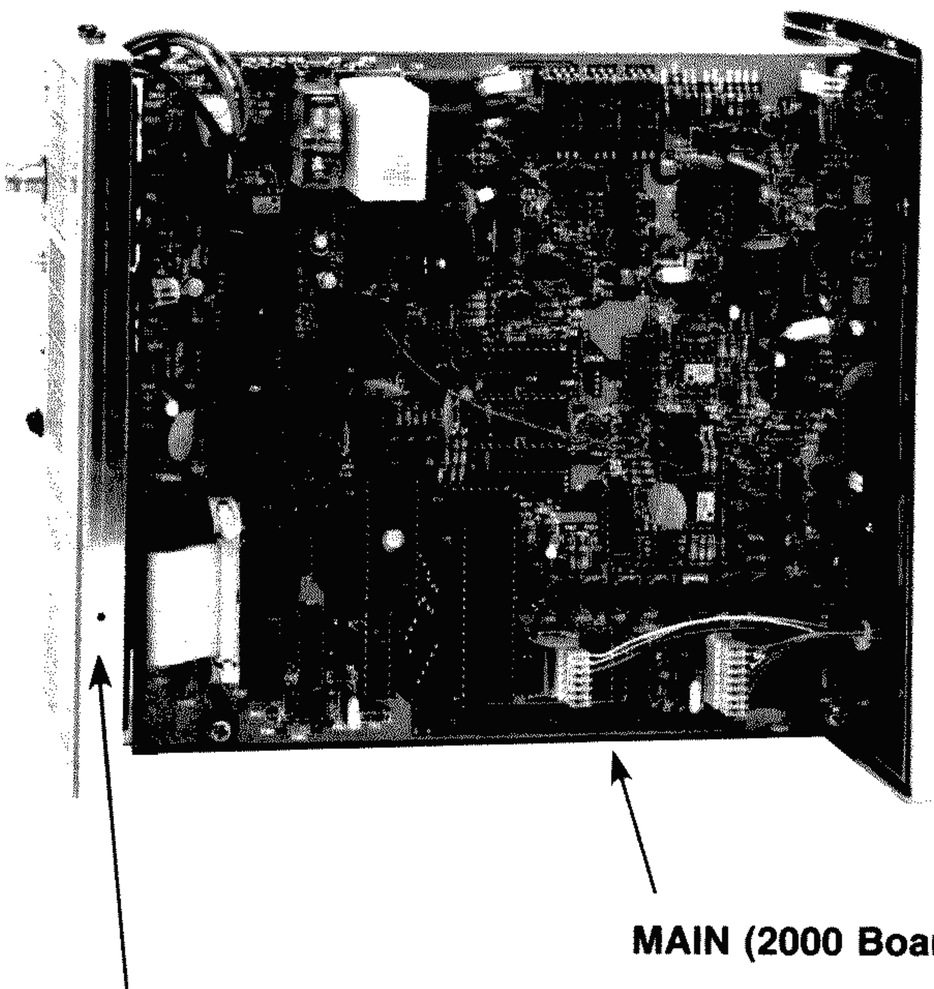

MAIN (2000 Board)

DISPLAY (1000 Board)

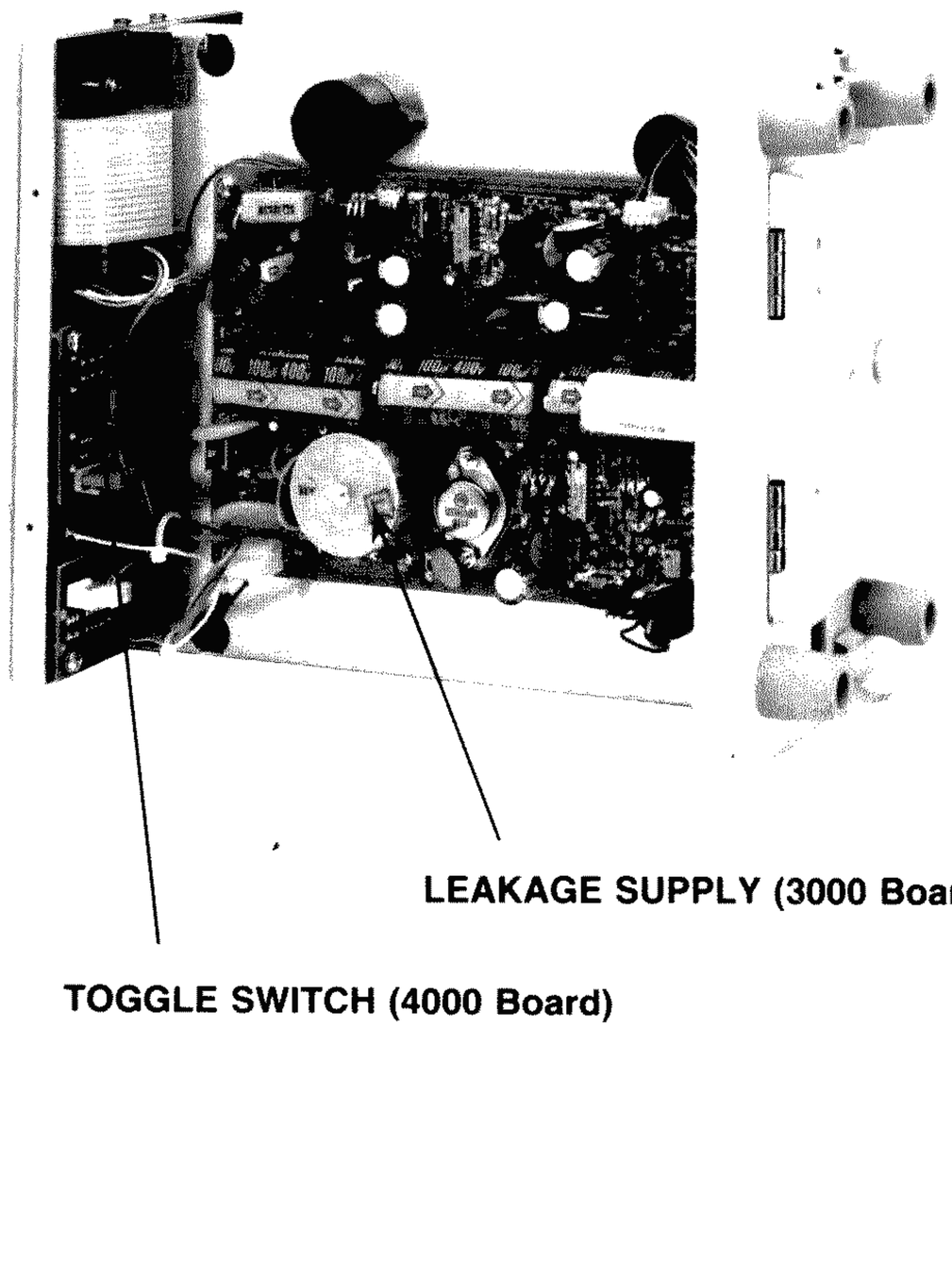

TOGGLE SWITCH (4000 Board)

LEAKAGE SUPPLY (3000 Board)

JDS TEST EQUIPMENT INC.
1507 Capital Ave. Ste. 102A
Plano, Tx 75074

Toll Free 1-800-SENCORE
SENCORE *innovatively designed with your time in mind.*
3200 Sencore Drive
Sioux Falls, SD 57107
Call Collect 605-339-0100 In SD

This sheet includes parts list, P.C. board layouts, and board numbers 1000 and 4000.

SHEET 1

SCHEMATIC REFERENCE	PART NO.	DESCRIPTION
Display Board Assembly 1000		
C1	24G374	Capacitor,MYLAR,.33UF,100V
C2, 3	24G207	Capacitor,DISC,.01UF,100V
C4	24G223	Capacitor,MYLAR,.15UF,100V
C5	24G382	Capacitor,LYTIC,10UF,16V
CR1-9	20G24	Lamp,LED,2V,50MA
D1	23A86	Display,LCD,6-DIGIT
D2	23A87:A	Display,LCD,4-DIGIT
IC1, 2, 3	69G92	IC,LCD,DRIVER,4332
IC4	69G150	IC,D Flip-Flop,MN74L374N
IC5	69G57-B	IC,Quad Latch,4042
IC6	69G205	IC,Dual Timer,7556
TR1	19A33-1	Transistor,2N3904,NPN
Main Board Assembly 2000		
C1,6,9,13,17,23,40, 50-54	164D5	Fuse Holder Assembly
C2	24G104	Capacitor,DISC,.1UF,100V
C3	24G452	Capacitor,DISC,8.2PF,100V
C5, 7, 37	24G452	Capacitor,DISC,8.2PF,100V
C6, 17,42,54	24G350	Capacitor,POLY,680PF,33V
C8	24G376	Capacitor,POLY,.0012UF,160V
C10,11,21,22,34	24G487	Capacitor,MYLAR,.0022UF,50V
C12, 32	24G70	Capacitor,DISC,100PF,500V
C16,18,19	24G188	Capacitor,POLY,.001UF,33V
C20, 48	24G216	Capacitor,MYLAR,.1UF,100V
C24	24G214	Capacitor,DISC,.001UF,500V
C26	24G262	Capacitor,POLY,150PF,125V
C27	24G345	Capacitor,POLY,.0022UF,160
C28	24G403	Capacitor,POLY,.01UF,400V
C29, 30, 31	24G404	Capacitor,MYLAR,.033UF,200
C33, 36,39,45,46	24G176	Capacitor,DISC,47PF,500V
C35, 47	24G382	Capacitor,LYTIC,10UF,16V
C38	24G207	Capacitor,DISC,.01UF,100V
C41	24G384	Capacitor,LYTIC,2.2UF,50V
C43	24G195	Capacitor,MYLAR,.022UF,250V
C44	24G450	Capacitor,LYTIC,1UF,50V
C55	24G216	Capacitor,MYLAR,.1UF,100V
C56	24G83	Capacitor,DISC,33PF,500V
C57	24G151	Capacitor,DISC,22PF,500V
CR1, 24	24G183	Capacitor,POLY,.01UF,33V
CR2, 4, 14, 43	50C4-29	Diode,ZENER,1N4733A,5.1V
CR3, 6, 7, 9, 11, 13, 15-23, 26-28,31,32,38,39,40, 44-46	16G18	Diode,1N4007
	50C5-2:A	Diode,1N4148
CR5	50C12-1	Diode,1N825,ZENER,6.2V
CR25	50C3-2:A	Diode,1N695
CR29, 30, 42	50G24	Diode,SIL,35V,50MA,
CR33, 34	16G21	Diode,FAST REC,100V
CR35	50C5-1	Diode,SILI,30V,40MA
CR41	50C3-1	Diode,1N34A
CR43	16G18	Diode,SILICON,1KV,1A
IC1, 13, 39, n42	69G210-B	IC,HEF4071,Quad OR
IC2	69G209-A	IC,GATE,QUAD,CMOS,2-IN NOR
IC3	69G127	IC, 78L12, Reg., +12V
IC4	69G171	IC, LM236H, +2.5V, Voltage Ref.
IC5, 18	69G211	IC,74C244,NonInverting Buffer
IC6	69G238	IC Res. Net.,PULLUP,8 X 10K
IC7	69G202	IC,74C373,D Flip-Flop
IC8	69G207	IC,Microprocessor,80C39
IC10	69G172	IC,RES,NET,5X10K
IC11, 12, 35, 37, 40	69G150	IC,MN74C374N,D Flip-Flop

SCHEMATIC REFERENCE	PART NO.	DESCRIPTION
R40, 53	15C26-3	Pot,500,1/2W
R43, 52	14A38-2402A	Resistor,240 Ohm,1/4W,1%
R53	15C26-3	Pot,500 Ohm,1/2W
R54	14A38-3031A	Resistor,3.01K,1/4W,1%
R69	15C26-24	Pot,10K,1/2W
T1	28A100:A	Transformer,Switching Pwr.Sup.
T2	28A97	Transformer,Switching Pwr.Sup.
TR1, 7, 9-12	19A33-1	Transistor,2N3904,NPN
TR2, 3, 13	19A34-1	Transistor,2N3906
TR4	19G61	Transistor,MTM6N60,MOSFET
TR5, 6	19G79	Transistor,MTP4N85,MOSFET
TR8	19G70	Transistor, 2N7000,Fetlington
TR14, 15	19G68	Transistor, MTP3055A
Toggle Switch Board 4000		
	25G352	Switch,LEAD ZERO
	25G355	Switch,POWER
	24G240	Switch,LEAKAGE
	25G384	Capacitor,LYTIC,2000UF,25V
Miscellaneous		
	44G20	Fuse,Slo-Blo, 3AG,1AMP
	20G26	LED,Indicator

SCHEMATIC REFERENCE	PART NO.	DESCRIPTION
IC14	69G47	IC,A/D,Converter,MC1443
IC15, 16,17	69G65-B	IC,4051,8 Input Switch
IC19	69G302	IC,Flip-Flop,74HC374
IC20, 25	69G169-B	IC,HEF4011B,Quad NAND Gate
IC21	69G123-B	IC,4066B,Quad Switch
IC22, 23, 28	69G46	IC,TLO84,OP AMP,QUAD,BIFET
IC24, 41	69G212	IC,Reg.,Adj.,LM317
IC26, 33, 43, 44, 46	69G63	IC,TLO81,OP-AMP
IC27	69G213	IC,LM319,Comparator
IC29	69G113	IC,LM306,Voltage Comparator
IC30	69G208-B	IC,4081,Quad AND
IC31	69G214	IC,74HC4040, Counter
IC32	69G341-B	IC,MC4013BCP
IC36, 38	69G303	IC,DAC0802,D/A
IC45	69G295	IC,MM5369AA-N,Divider
IC46	69G189	IC,TLO82,OP-AMP,Dual
L1, 9	41G13	Relay,SPST,5V,.7A
L2	41G6	Relay,SPDT,3V,2A
L3	41G28	Relay,SPDT,12V,16A
L4	41G15	Relay,SPST,5V,.7A
L5-8, 10	41G12	Relay,SPST,5V,.5A
L8, 10	41G12	Relay,SPST,5V,.5A
LS1	48G8	Buzzer
R13	14A38-1603A	Resistor,1.6K,1/4W,1%
R14, 105, 107	15C26-3	Pot,500 Ohm,1/2W
R18	14A38-1604A	Resistor,16K,1/4W,1%
R19, 59, 71, 109, 201	15C26-18	Pot,2K,1/2W
R20, 147, 200	15C26-21	Pot,5M,1/2W
R21, 22,24,25,76,134,143	14A38-1004A	Resistor,10K,1/4W,1%
R46,189	15C26-14	Pot,100K,1/2W
R47	14A38-3013A	Resistor,3.01K,1/4W,1%
R48	15C26-15	Pot,1K,1/2W
R55, 117	15C26-11	Pot,200K,1/2W
R72	14A38-1694A	Resistor,16.9K,1/4W,1%
R74, 136	14A38-3324A	Resistor,33.2K,1/4W,1%
R80, 207	15C26-17	Pot,100 Ohm,1/2W
R81	14A38-2001A	Resistor,20 Ohm,1/4W,1%
R82	14C32-3300A	Resistor,3.3 Ohm,1W,1%
R91, 111	15C26-20	Pot,5K,1/2W
R95	15C26-19	Pot,50K,1/2W
R104	14A38-4992A	Resistor,499 Ohm,1/4W,1%
R106	14A38-2403A	Resistor,2.4K,1/4W,1%
R108, 181	14A38-9093A	Resistor,9.09K,1/4W,1%
R110	14A38-2704A	Resistor,27K,1/4W,1%
R112	14A38-9094A	Resistor,90.9K,1/4W,1%
R113, 188	15C26-10	Pot,20K,1/2W
R114	14A38-2705A	Resistor,270K,1/4W,1%
R115	15C26-19	Pot,50K,1/2W
R116	14A38-9095A	Resistor,909K,1/4W,1%
R120, 172	14A38-1002A	Resistor,100 Ohm,1/4W,1%
R125	14A38-332A	Resistor,332 Ohm,1/4W,1%
R127	14A38-1003A	Resistor,1K,1/4W,1%
R130	14A38-3323A	Resistor,3.32K,1/4W,1%
R137	14A38-1005A	Resistor,100K,1/4W,1%
R138, 139, 150, 153	14A38-4993A	Resistor,4.99K,1/4W,1%
R149, 151, 161	14A39-4994A	Resistor,49.9K,1/4W,1%
R158	15C26-16	Pot,10 Ohm,1/2W
R159	14A38-1501A	Resistor,15 Ohm,1/4W,1%
R162	14A38-7803A	Resistor,7.8K,1/4W,1%
R163	14A38-2703A	Resistor,2.7K,1/4W,1%

SCHEMATIC REFERENCE	PART NO.	DESCRIPTION
R165	14C1-682	Resistor,6.8K,1/4W
R169	14A38-1105A	Resistor,110K,1/4W,1%
R171	14C29-1001A	Resistor,10 Ohm,1/2W,1%
R175	14A38-1503A	Resistor,1.5K,1/4W,1%
R182	14A38-2006A	Resistor,2M,1/4W,1%
R187	14A38-1605A	Resistor,160K,1/4W,1%
R191	15C26-14	Pot,100K,1/2W
R202	15C26-23	Pot,1M,1/2W
TR1,4,6,14,16,20-22,27-29 30,32,34,36,38,45,48,51-53 56	19A33-1	Transistor,2N3904,NPN
TR2,5,7,9,10,17,31,33,35,37, 39,44,46,55	19A34-1	Transistor,2N3906,PNP
TR8	19G68	Transistor,MTP3055A,PNP
TR11, 12	19A45	Transisstor,2N5771,PNP
TR15	19G58	Transistor,2N6559,NPN
TR17	19A34-1	Transistor,2N3906,PNP
TR18	19A30-1	Transistor,MJE170,PNP
TR19	19G50	Transistor,J211,N-CHNL,FET
TR24,25,26	19G62	Transistor,MPF930,MOSFET
TR40,41,42,49,50,54	19G70	Transistor,2N7000,Fetlington
X1	47A38:A	Crystal,QTZ,6MHZ
X2	47A47	Crystal,QTZ,3.579545MHz

Leakage Supply Board 3000

C1	24G442	Capacitor,LYTIC,100UF,16V
C2,5,7,9,16,22,23,25,26,30	24G104	Capacitor,DISC,.1UF,100V
C3, 31	24G207	Capacitor,DISC,.01UF,100V
C4, 20	24G214	Capacitor,DISC,.001UF,500V
C6, 18, 24	24G382	Capacitor,LYTIC,10UF,16V
C8, 19, 28	24G437	Capacitor,LYTIC,470UF,25V
C10, 11, 12	24G469	Capacitor,LYTIC,100UF,400V
C13, 32	24G221	Capacitor,DISC,.01UF,2000V
C14	24G424	Capacitor,LYTIC,2200UF,25V
C15	24G9	Capacitor,DISC,.005UF,600V
C17	24G450	Capacitor,LYTIC,1UF,50V
C21	24G11	Capacitor,LYTIC,220UF,50V
C27	24G411	Capacitor,LYTIC,220UF,50V
C29	24G223	Capacitor,MYLAR,.15UF,100V
C33	24G384	Capacitor,LYTIC,2.2UF,50V
CR1,2,3,4,5,13,14,15	50C5-2:A	Diode,1N4148
CR6, 7	50G23	Diode,ZENER,200V
CR8, 9, 10	16G22	Diode,MR817,Fast Recovery
CR11	50C4-20	Diode,ZENER,68V
CR12, 21	16G21	Diode,UF4002B
CR16, 24	16G10	Diode,1N4004
CR17, 25	16G14	Diode,1N5401
CR18	16G24	Diode,1N5822,SCHOTTKY
CR20	50C4-26	Diode,ZENER,15V
CR23	16G19	Diode,1N5158,SCHOTTKY
CR26	50C4-11	Diode,ZENER,15V
IC1	69G46	IC,TLO84,Quad,BIFET,OP-AMP
IC2	69G189	IC,TLO82CP,Dual OP-AMP
IC3, 4	69G223	IC,TL5941,Pulse Width Mod.
IC5	69G212	IC,LM317,Voltage Reg.
IC6	69G231	IC,LM317LZ,Adj. Reg.
IC7	69G273	IC,79M05,-5V,.5A,.Reg.
L1	46G129	Inductor,Axial,500UH
R32, 33, 65, 66	14C29-4995A	Resistor,499K,1/2W,1%

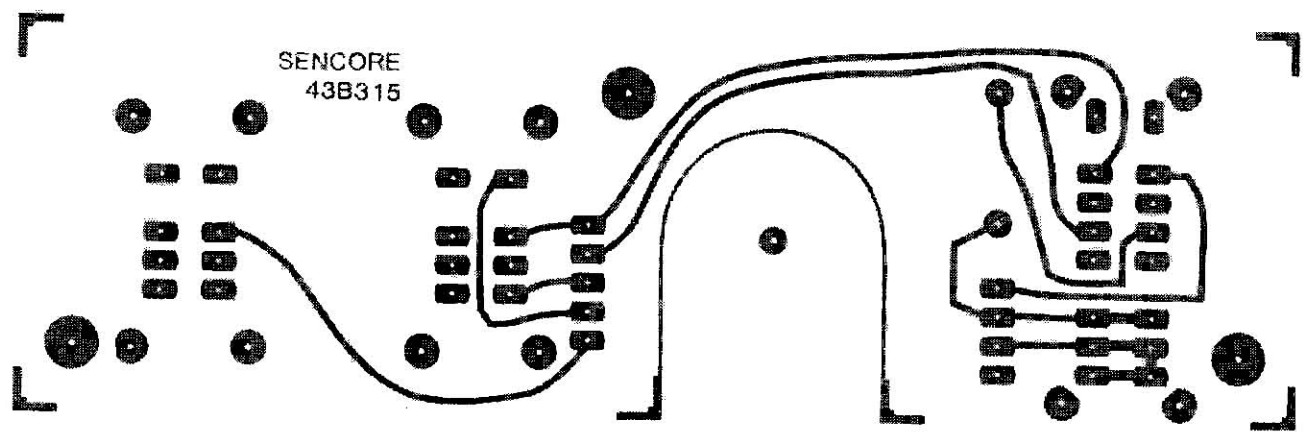

TOGGLE SWITCH BOARD (Foil Side)

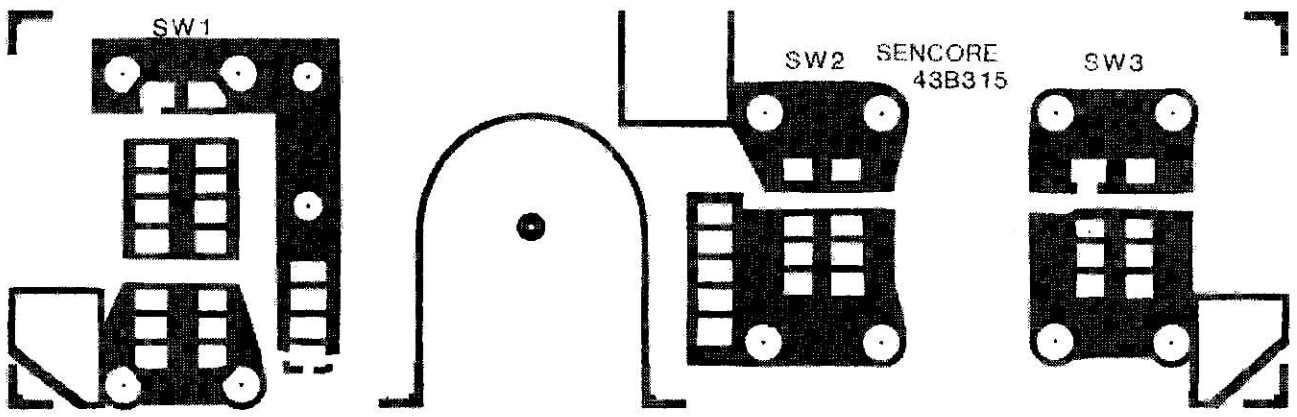

TOGGLE SWITCH BOARD (Component Side)

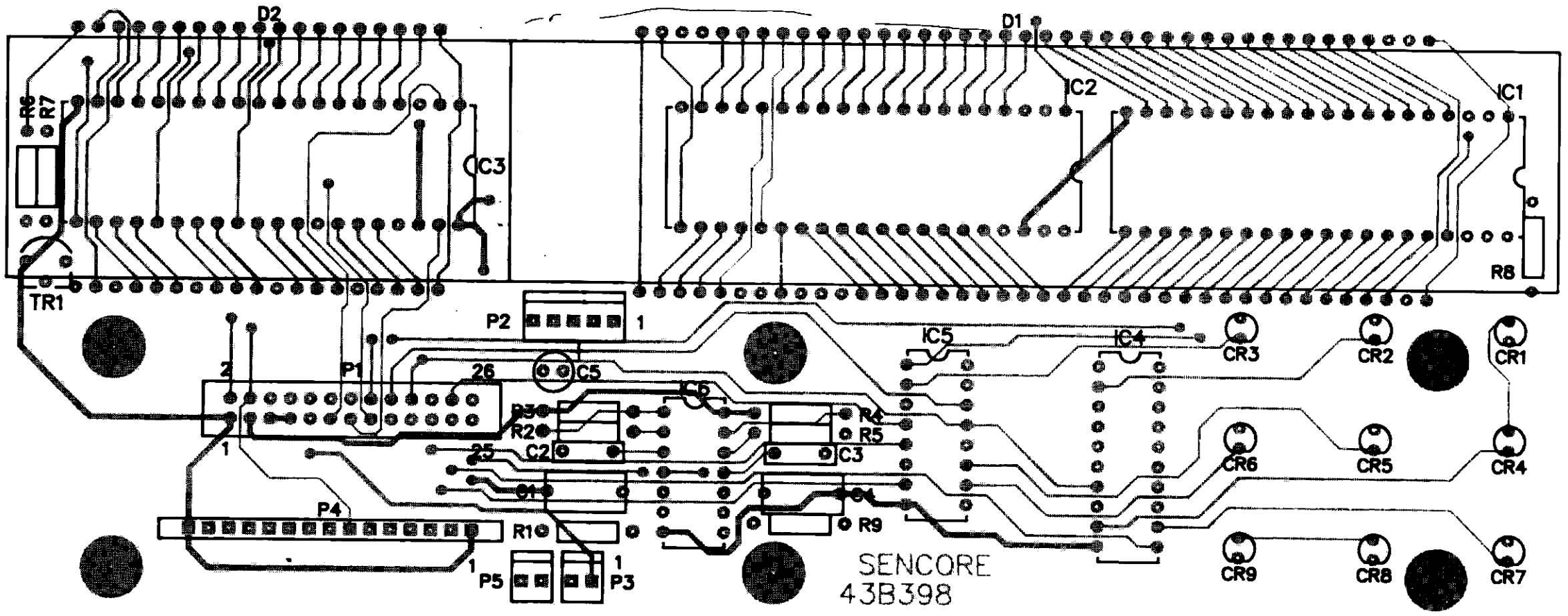

DISPLAY BOARD (Component Side)

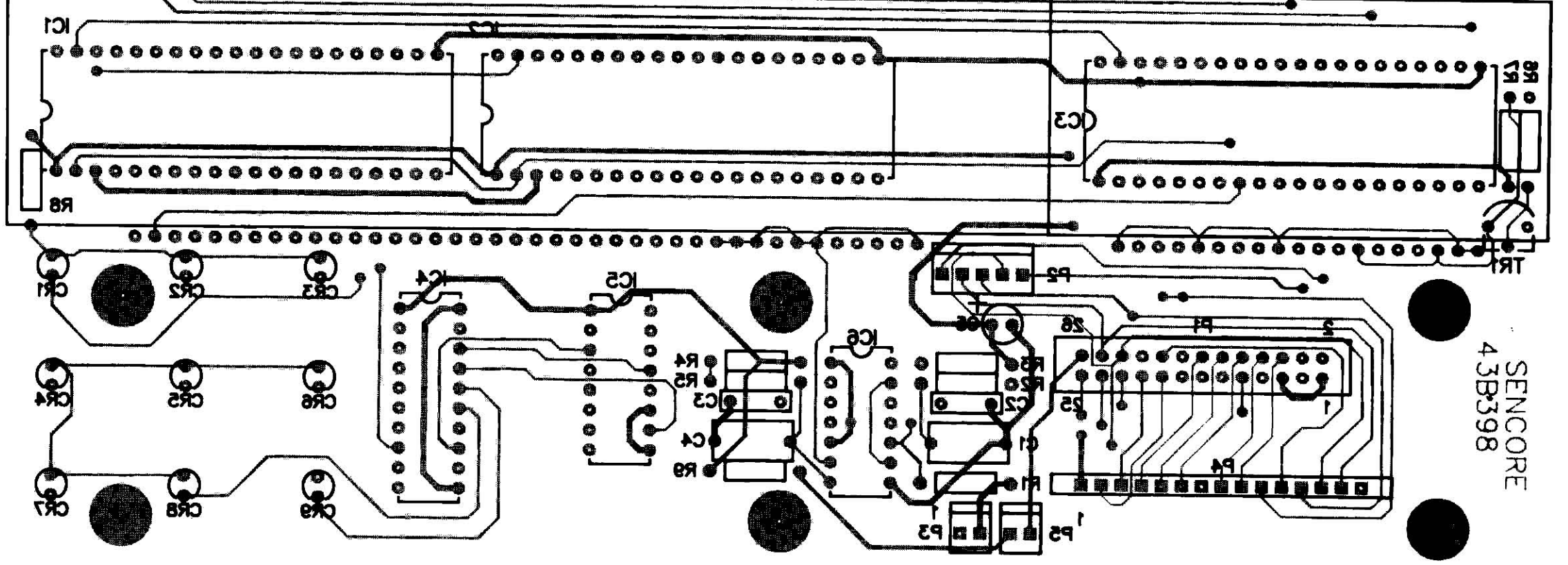

DISPLAY BOARD (Foil Side)

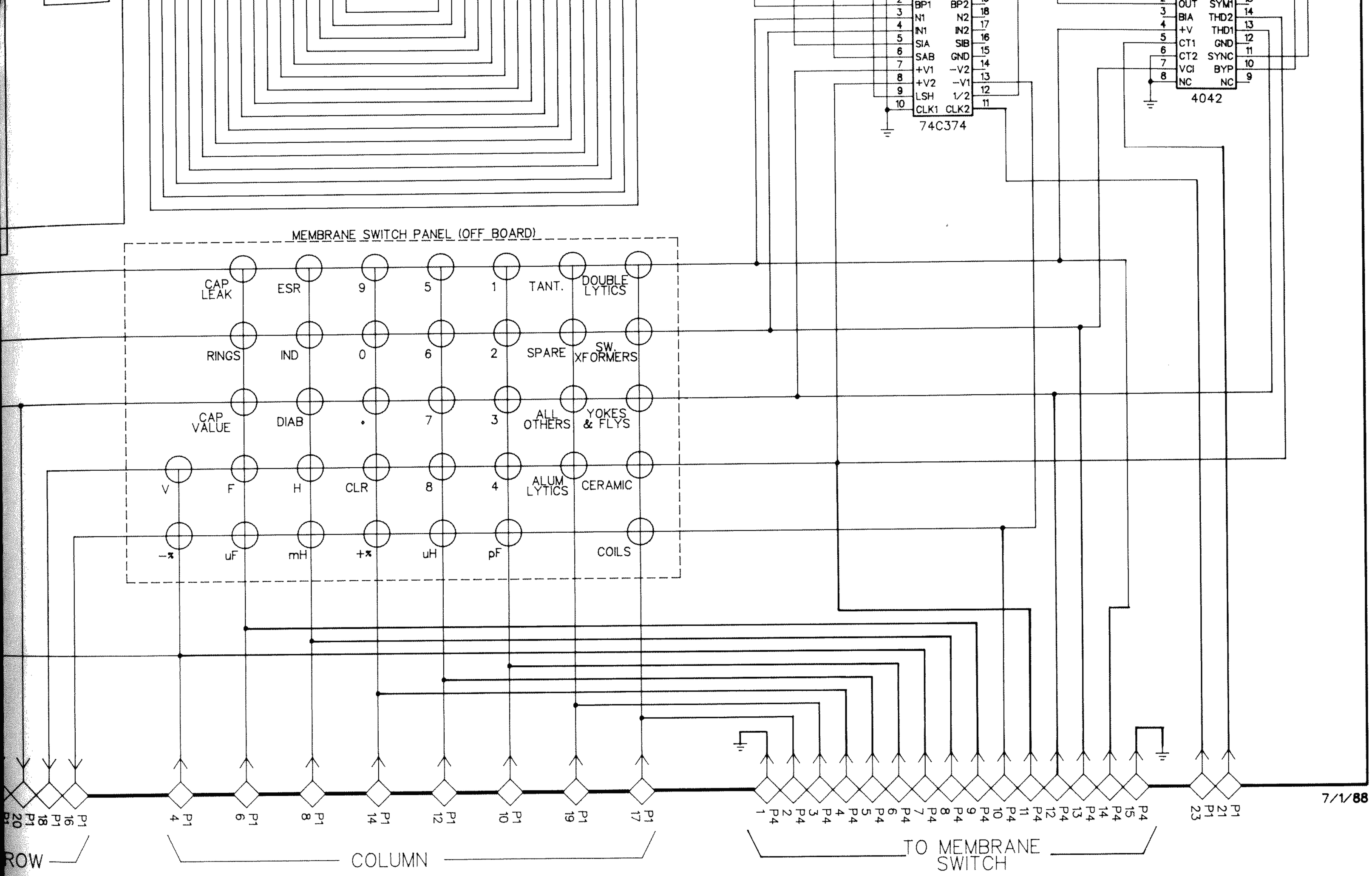
MEMBRANE SWITCH PANEL (OFF BOARD)
CAP LEAK
ESR
9
5
1
TANT.
DOUBLE LYTICS
RINGS
IND
0
6
2
SPARE
SW. XFORMERS
CAP VALUE
DIAB
.
7
3
ALL OTHERS
YOKES & FLYS
V
F
H
CLR
8
4
ALUM LYTICS
CERAMIC
-%
uF
mH
+%
uH
pF
COILS
74C374
4042
ROW
COLUMN
TO MEMBRANE SWITCH
7/1/88

— DISPLAY

D2

4 DIGIT LCD

+5V

IC3

MD4332B

40 39 38 37 36 35 34 33 32 31 30 29 28 27 26 25 24 23 22 21

+5V

R8
2.2K

CR2 CR9 CR8 CR4

CR7 CR3 CR6 CR5 CR1

+5V

+5V

1000 BOARD

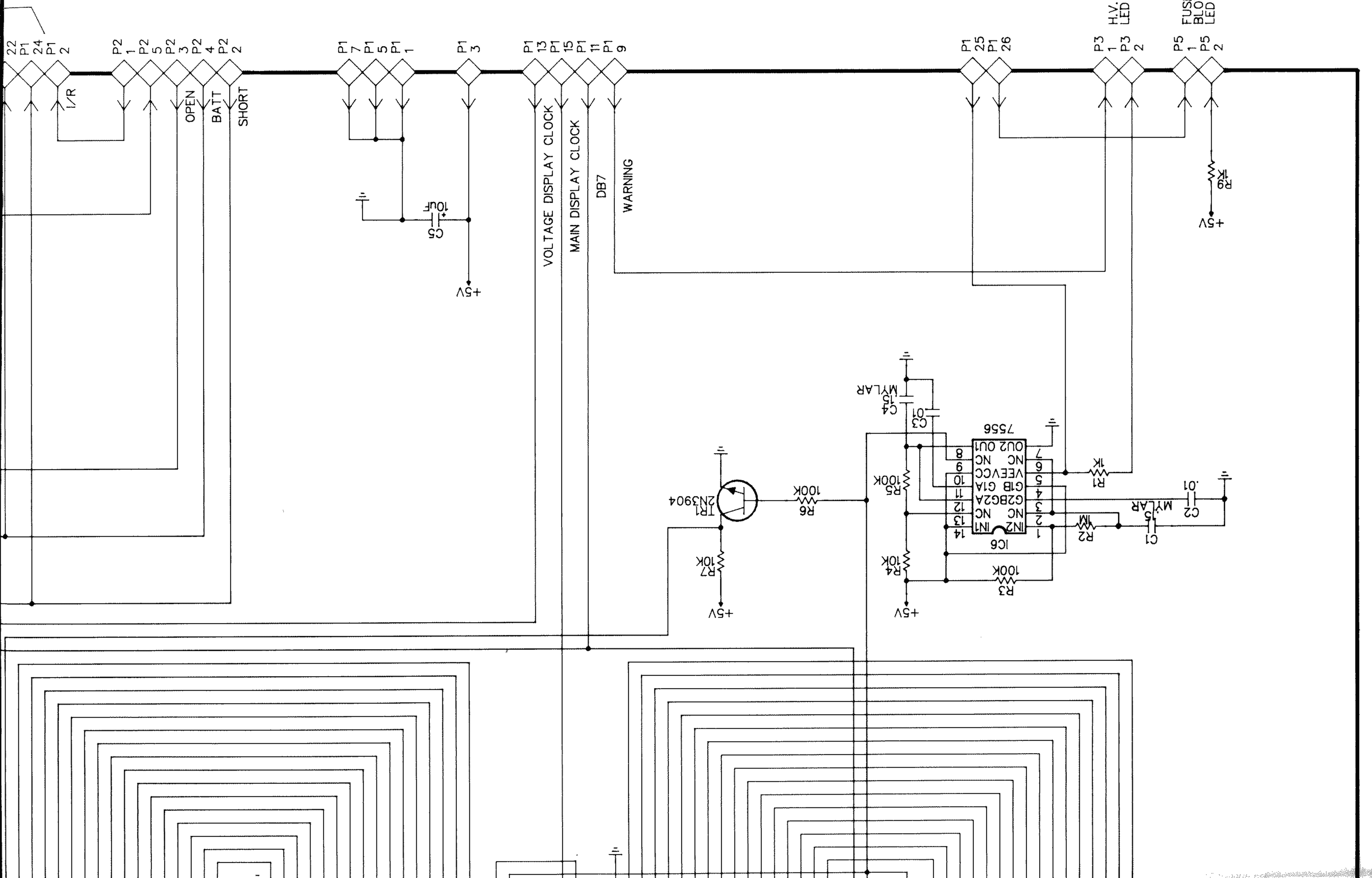
P1 22
P1 24
P1 2
I/R
P2 1
P2 5
P2 3
OPEN
P2 4
BATT
P2 2
SHORT
P1 7
P1 5
P1 1
C5 10UF
+5V
P1 3
P1 13
P1 15
P1 11
P1 9
VOLTAGE DISPLAY CLOCK
MAIN DISPLAY CLOCK
DB7
WARNING
P1 25
P1 26
P3 1
P3 2
H.V. LED
P5 1
P5 2
FUSE BLOWN LED
R9 2K
+5V
C4 .15 MYLAR
C3 .01
7556
OUT2 OUT1
NC NC
VEE VCC
G1B G1A
G2B G2A
NC NC
IN2 IN1
IC6
R5 100K
R4 10K
R3 100K
R1 1K
R2 1M
C1 .15 MYLAR
C2 .01
R6 100K
TR1 2N3904
R7 10K
+5V
+5V

LC 102 DISPLAY
43B398
1000 BD.

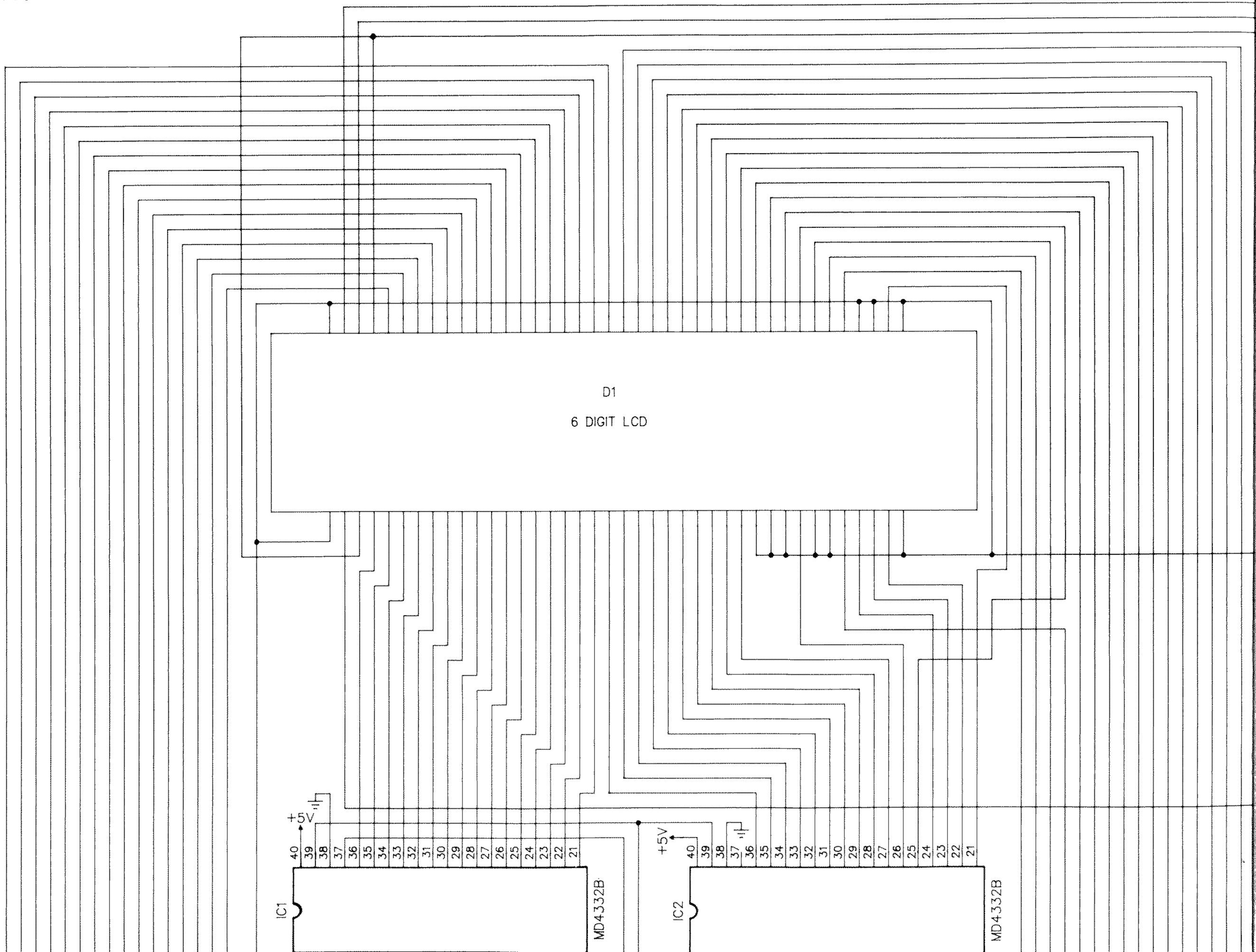

D1

6 DIGIT LCD

IC1

MD4332B

IC2

MD4332B

+5V

+5V

+5V

+5V

R3
100K

R4
10K

R7
10K

C1
.15
MYLAR

R2
1M

C2
.01

IC6

IN2 IN1
NC NC
G2BG2A
G1B G1A
VEEVCC
NC NC
OU2 OU1

7556

R1
1K

R6
100K

TR1
2N3904

R5
100K

C3
.01

C4
.15
MYLAR

D2

4 DIGIT LCD

+5V

IC3

MD4332B

+5V

R8
2.2K

CR2 CR9 CR8 CR4 CR7 CR3 CR6 CR5 CR1

+5V

IC4

74C374

+5V

IC5

4042

MEMBRANE SWITCH PANEL (OFF BOARD)

CAP LEAK	ESR	9	5	1	TANT.	DOUBLE LYTICS
RINGS	IND	0	6	2	SPARE	SW. XFORMERS
CAP VALUE	DIAB	.	7	3	ALL OTHERS	YOKES & FLYS
V	F	H	CLR	8	4	ALUM LYTICS	CERAMIC

D2

4 DIGIT LCD

IC2

MD4332B

IC3

MD4332B

+5V

MEMBRANE SWITCH PANEL (OFF BOARD)

CAP LEAK

ESR

9

5

1

RINGS

IND

0

6

2

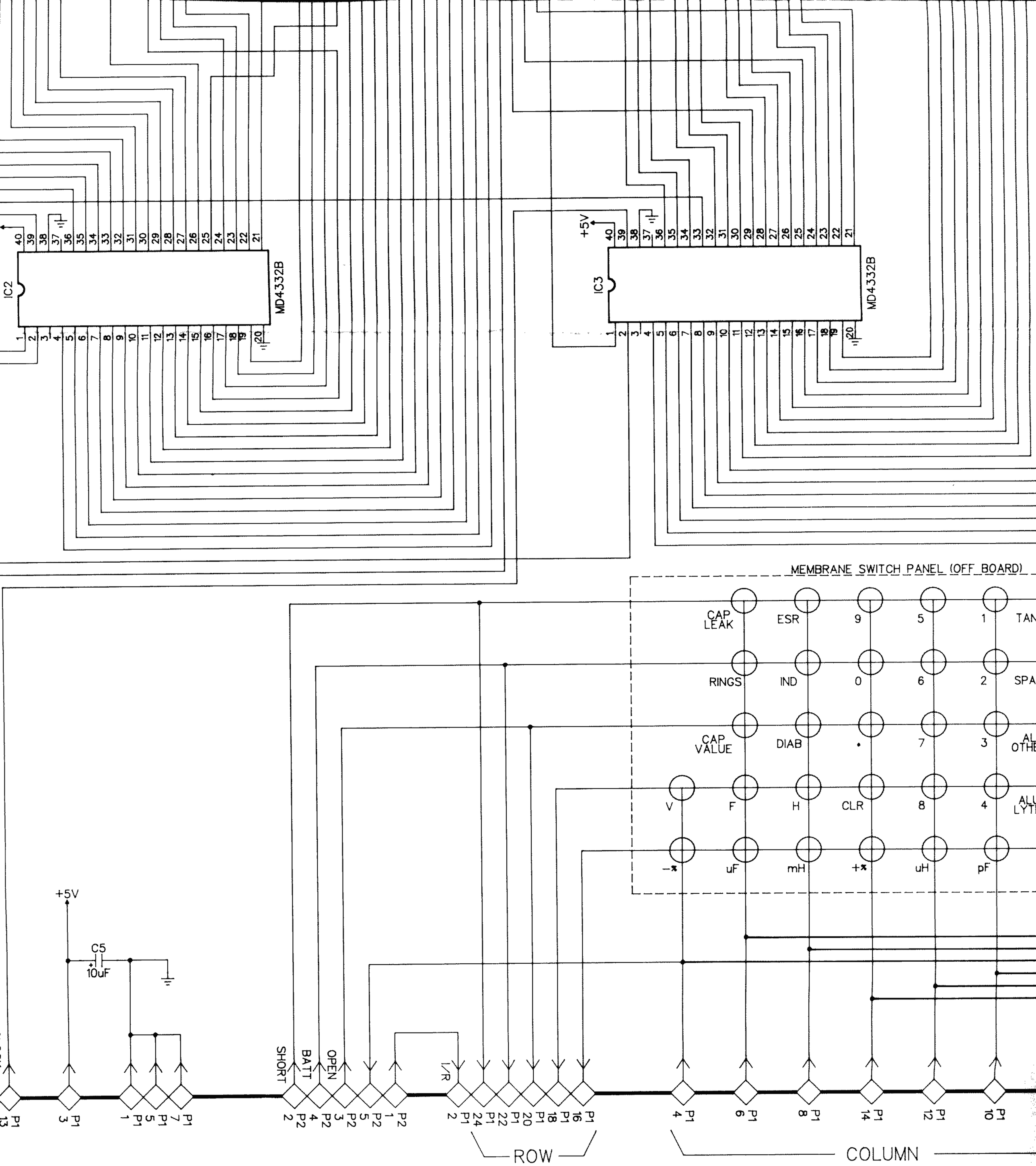

1000 BOARD — DISPLAY

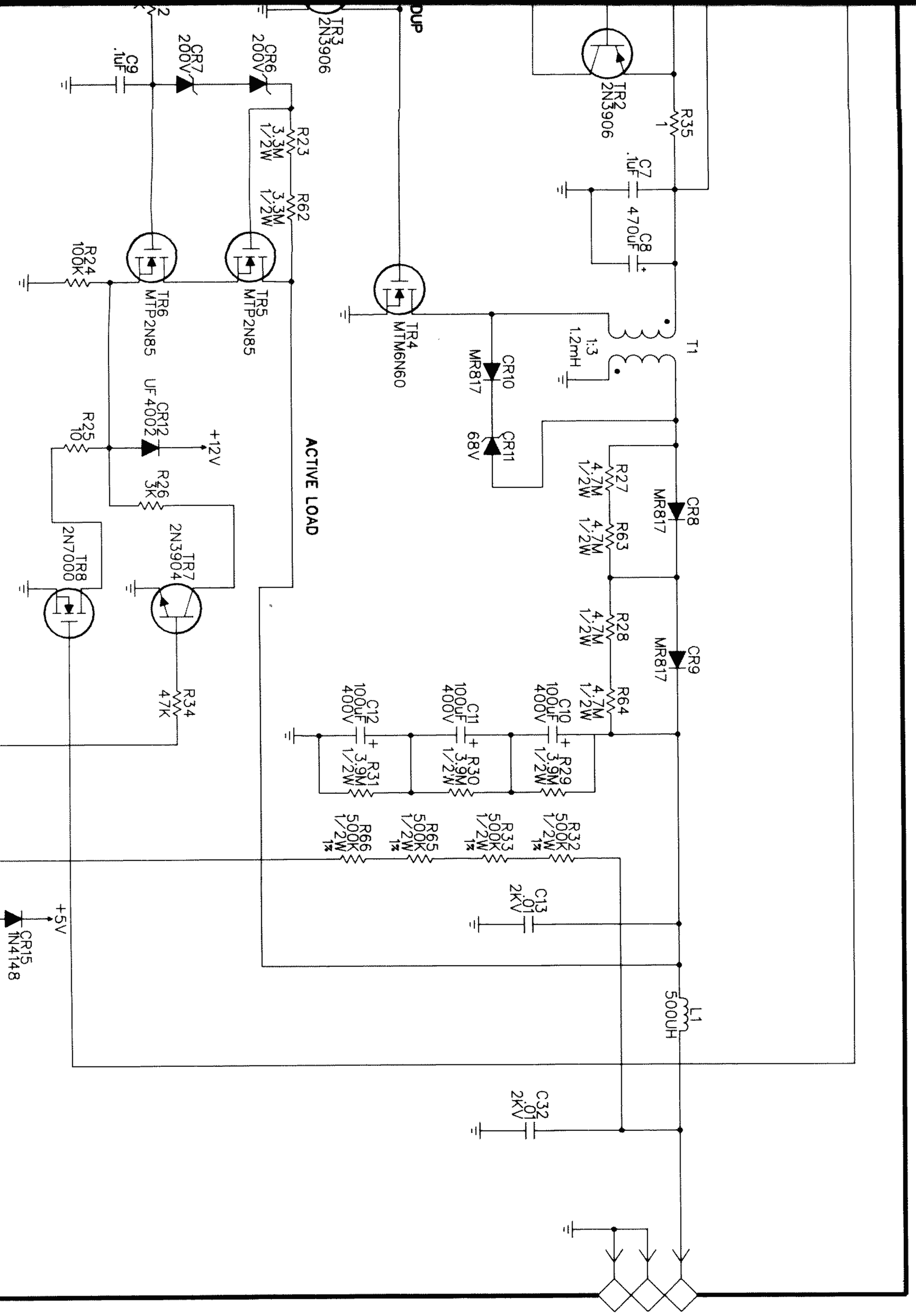

Toll Free 1-800-SENCORE
SENCORE *innovatively designed with your time in mind.*
3200 Sencore Drive
Sioux Falls, SD 57107
Call Collect 605-339-0100 In SD

This sheet includes board numbers 2000 and 3000.

SHEET 2

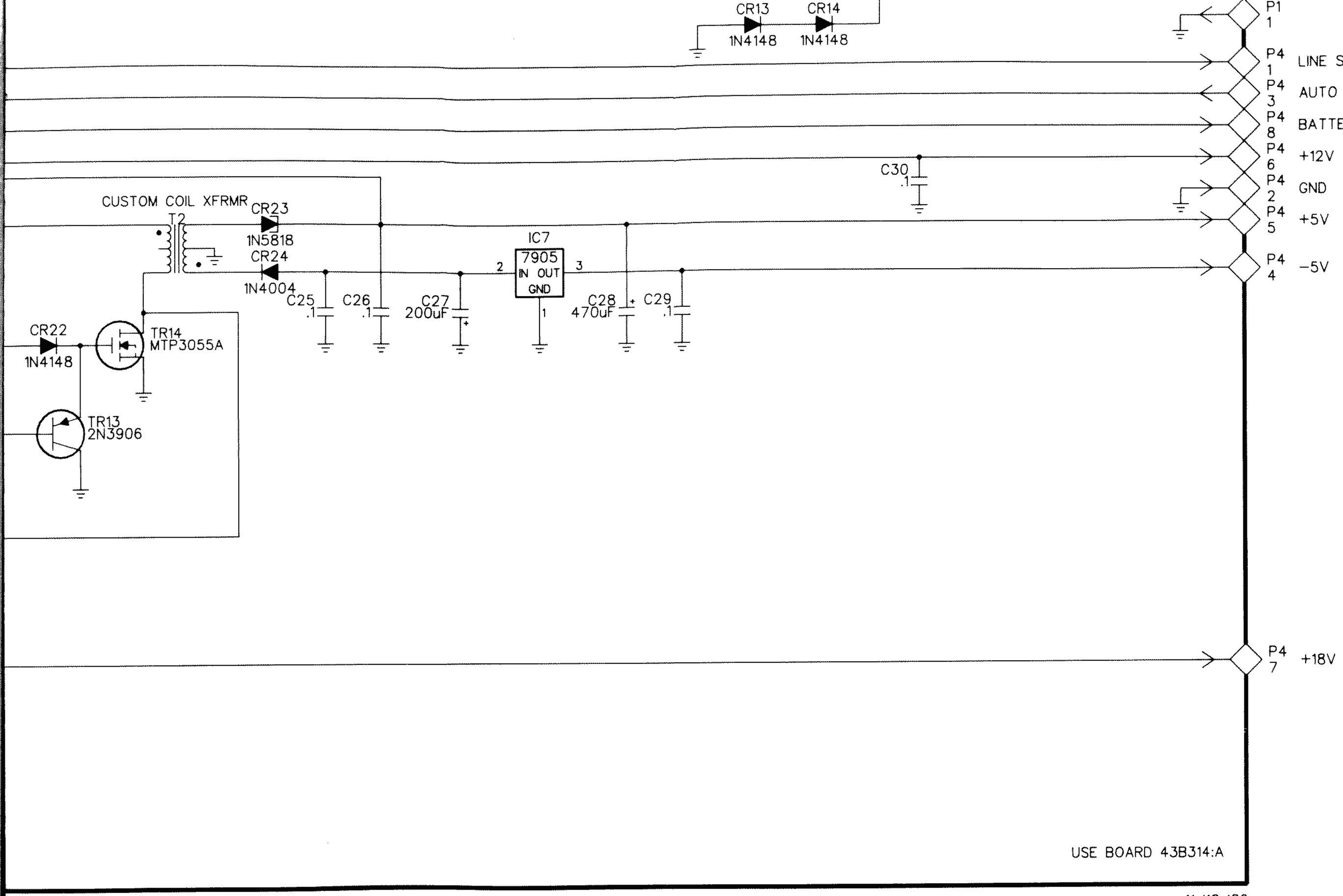

AKAGE SUPPLY

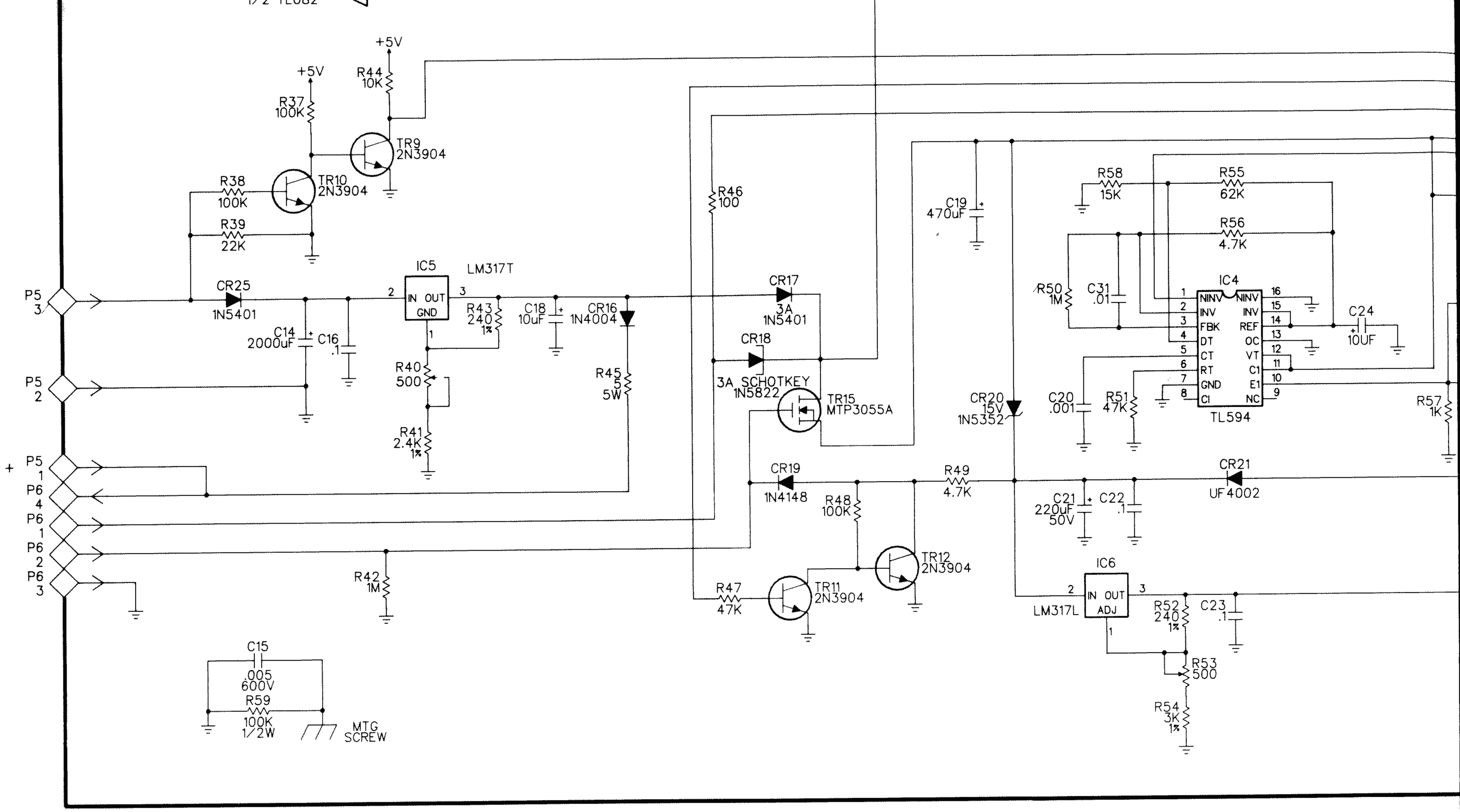
+5V
R44 10K
+5V
R37 100K
TR9 2N3904
R38 100K
TR10 2N3904
R39 22K
IC5 LM317T
CR25 1N5401
IN OUT GND
C14 2000uF
C16 .1
R43 240 1%
C18 10uF
CR16 1N4004
R40 500
R41 2.4K 1%
R45 5 5W
R46 100
CR17 3A 1N5401
CR18 3A SCHOTKEY 1N5822
TR15 MTP3055A
C19 470uF
CR20 15V 1N5352
R58 15K
R55 62K
R56 4.7K
R50 1M
C31 .01
IC4
NINV INV FBK DT CT RT GND CI
NINV INV REF OC VT C1 E1 NC
TL594
C24 10UF
C20 .001
R51 47K
R57 1K
P5 3
P5 2
P5 1
P6 4
P6 1
P6 2
P6 3
CR19 1N4148
R48 100K
R49 4.7K
CR21 UF4002
C21 220uF 50V
C22 .1
TR12 2N3904
R42 1M
R47 47K
TR11 2N3904
IC6
IN OUT ADJ
LM317L
R52 240 1%
C23 .1
R53 500
R54 3K 1%
C15 .005 600V
R59 100K 1/2W
MTG SCREW

LC102 LEAKAGE SUPPLY
43B314
3000 BOARD

ON P2 2
P2 1

R15 47K
R18 47K
TR1 2N3904
C5 .1uF
+12V
R19 220K
R21 1K

R7 10K
CR1 1N4148
CR2 1N4148
R2 100K
R5 100K
IC1 1/4 TL084
R4 100K
CR3 1N4148
C2 .1uF
R8 1M
R12 1K

IC3 TL594
NINV
INV
FBK
DT
CT
RT
GND
C1
REF
OC
VT
C2
E2
E1
R16 4.7K
C4 .001
R17 200K
CR5 1N4148
R20 1K
SPEE

+5V
R3 100K
IC2 1/2 TL082
-5V
R61 4.7K
R60 100K
R9 1M
C3 .01
CR4 1N4148
C17 1UF
R1 100K
R10 15K
R13 150K
C1 100uF 16V
C6 10uF
R14 24K
R6 22K
R11 1K
IC1 1/4 TL084
IC2 1/2 TL082
+5V

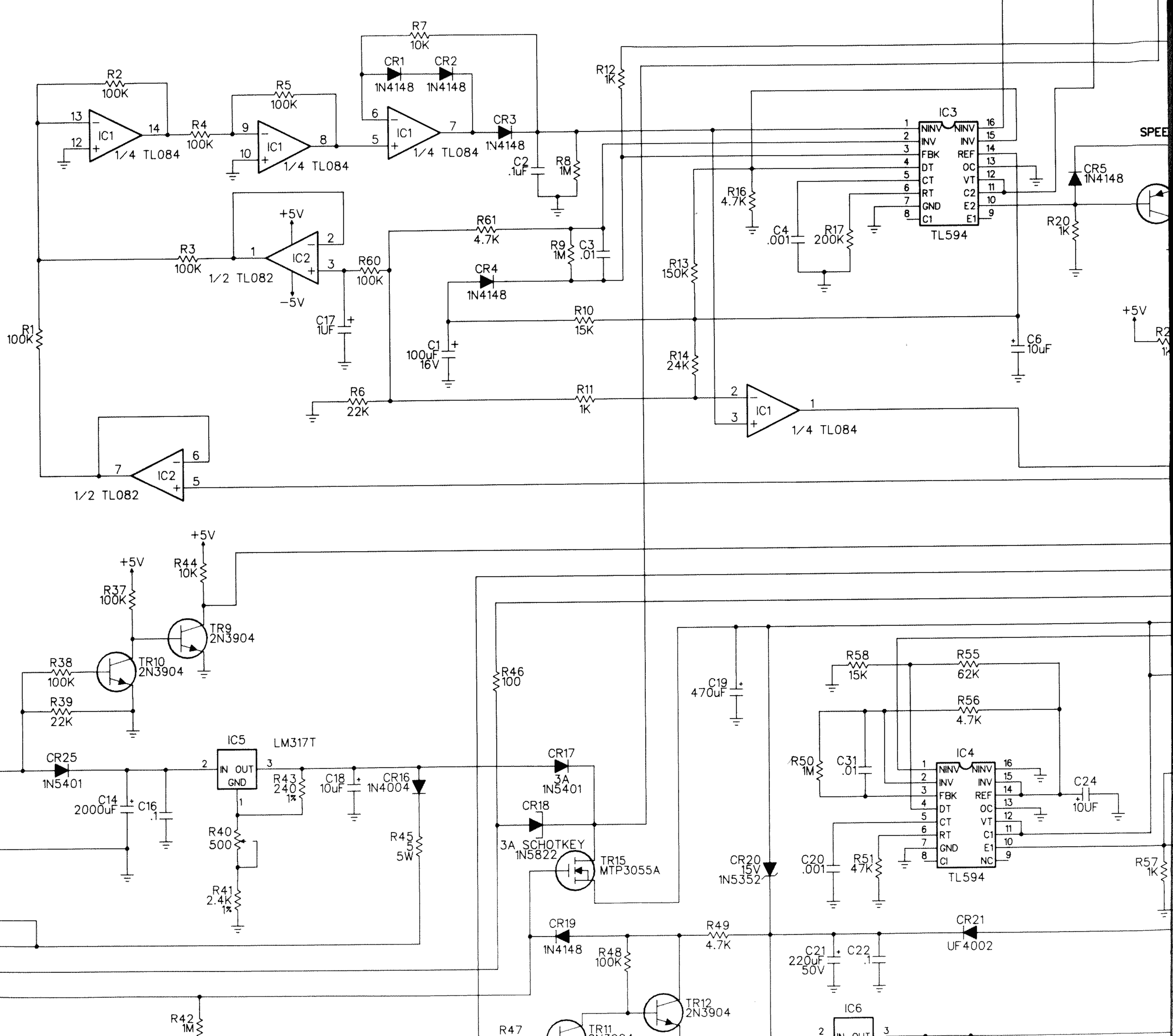
R7
10K
CR1
1N4148
CR2
1N4148
R2
100K
R5
100K
IC1
1/4 TL084
R4
100K
IC1
1/4 TL084
IC1
1/4 TL084
CR3
1N4148
R12
1K
C2
.1uF
R8
1M
IC3
TL594
NINV
INV
FBK
DT
CT
RT
GND
C1
NINV
INV
REF
OC
VT
C2
E2
E1
R16
4.7K
C4
.001
R17
200K
CR5
1N4148
R20
1K
SPEE
+5V
R61
4.7K
R3
100K
IC2
1/2 TL082
R60
100K
R9
1M
C3
.01
CR4
1N4148
R10
15K
R13
150K
R14
24K
C17
1UF
C1
100uF
16V
R6
22K
R11
1K
IC1
1/4 TL084
C6
10uF
R1
100K
IC2
1/2 TL082
+5V
R37
100K
R44
10K
TR9
2N3904
TR10
2N3904
R38
100K
R39
22K
R46
100
C19
470uF
R58
15K
R55
62K
R56
4.7K
IC5
LM317T
IN OUT
GND
CR25
1N5401
C14
2000uF
C16
.1
R43
240
1%
C18
10uF
CR16
1N4004
R40
500
R41
2.4K
1%
R45
5
5W
CR17
3A
1N5401
CR18
3A SCHOTKEY
1N5822
TR15
MTP3055A
IC4
TL594
R50
1M
C31
.01
C24
10UF
CR20
15V
1N5352
C20
.001
R51
47K
R57
1K
P5
3
P5
2
P5
1
P6
4
P6
1
P6
2
P6
3
CR19
1N4148
R49
4.7K
CR21
UF4002
R48
100K
TR12
2N3904
C21
220uF
50V
C22
.1
IC6
R42
1M
R47
TR11

TR2
2N3906

.1uF

470uF

1:3
1.2mH

R27
4.7M
1/2W

R63
4.7M
1/2W

R28
4.7M
1/2W

R64
4.7M
1/2W

C10
100uF
400V

R29
3.9M
1/2W

C11
100uF
400V

R30
3.9M
1/2W

C12
100uF
400V

R31
3.9M
1/2W

R32
500K
1/2W
1%

R33
500K
1/2W
1%

R65
500K
1/2W
1%

R66
500K
1/2W
1%

C13
.01
2KV

C32
.01
2KV

CR10
MR817

CR11
68V

TR4
MTM6N60

TR3
2N3906

ACTIVE LOAD

R23
3.3M
1/2W

R62
3.3M
1/2W

CR6
200V

CR7
200V

TR5
MTP2N85

TR6
MTP2N85

C9
.1uF

R24
100K

+12V

CR12
UF4002

R26
3K

R25
10

TR7
2N3904

R34
47K

TR8
2N7000

+5V

CR15
1N4148

CR13
1N4148

CR14
1N4148

P3
2
1

P1
2
1

D/A CONTROL

P4
1
LINE SYNC

P4
3
AUTO OFF

P4
8
BATTERY MONITOR

P4
6
+12V

P4
2
GND

P4
5
+5V

P4
4
−5V

C30
.1

CUSTOM COIL XFRMR
T2

CR23
1N5818

CR24
1N4004

IC7
7905
IN OUT
GND

C25
.1

C26
.1

C27
200uF

C28
470uF

C29
.1

CR22
1N4148

TR14
MTP3055A

TR13
2N3906

Toll Free 1-800-SENCORE
SENCORE
3200 Sencore Drive
Sioux Falls, SD 57107
Call Collect 605-339-0100 In SD
innovatively designed
with your time in mind.

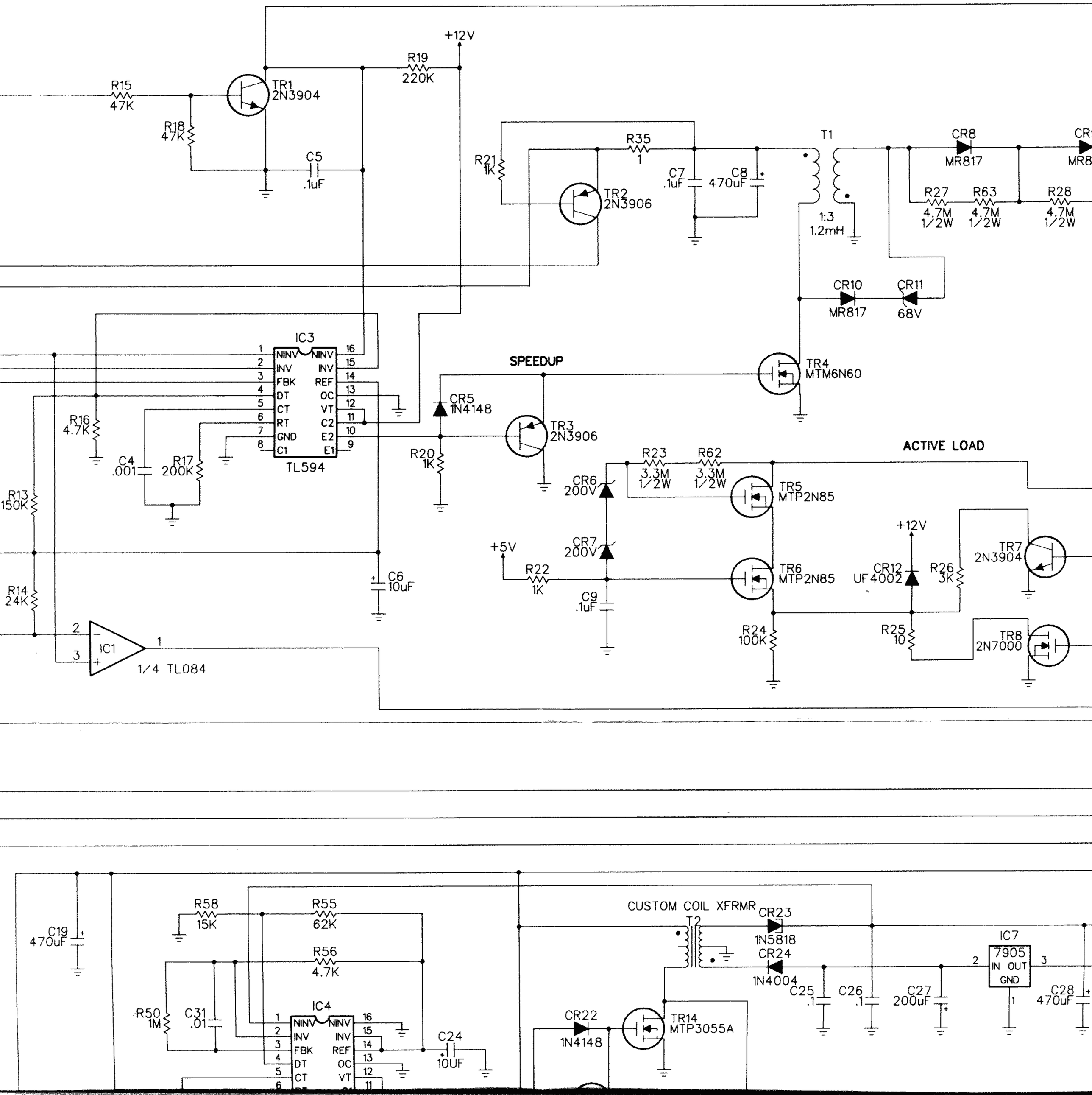
+12V
R19
220K
R15
47K
TR1
2N3904
R18
47K
C5
.1uF
R21
1K
R35
1
TR2
2N3906
C7
.1uF
C8
470uF
T1
1:3
1.2mH
CR8
MR817
R27
4.7M
1/2W
R63
4.7M
1/2W
R28
4.7M
1/2W
CR10
MR817
CR11
68V
IC3
1 NINV
2 INV
3 FBK
4 DT
5 CT
6 RT
7 GND
8 C1
16 NINV
15 INV
14 REF
13 OC
12 VT
11 C2
10 E2
9 E1
TL594
R16
4.7K
C4
.001
R17
200K
R13
150K
R14
24K
IC1
1/4 TL084
C6
10uF
SPEEDUP
CR5
1N4148
TR3
2N3906
R20
1K
TR4
MTM6N60
ACTIVE LOAD
R23
3.3M
1/2W
R62
3.3M
1/2W
CR6
200V
CR7
200V
+5V
R22
1K
C9
.1uF
TR5
MTP2N85
TR6
MTP2N85
R24
100K
+12V
CR12
UF4002
R26
3K
R25
10
TR7
2N3904
TR8
2N7000
C19
470uF
R58
15K
R55
62K
R56
4.7K
R50
1M
C31
.01
IC4
C24
10UF
CUSTOM COIL XFRMR
T2
CR23
1N5818
CR24
1N4004
C25
.1
C26
.1
C27
200uF
IC7
7905
IN OUT
GND
C28
470uF
CR22
1N4148
TR14
MTP3055A

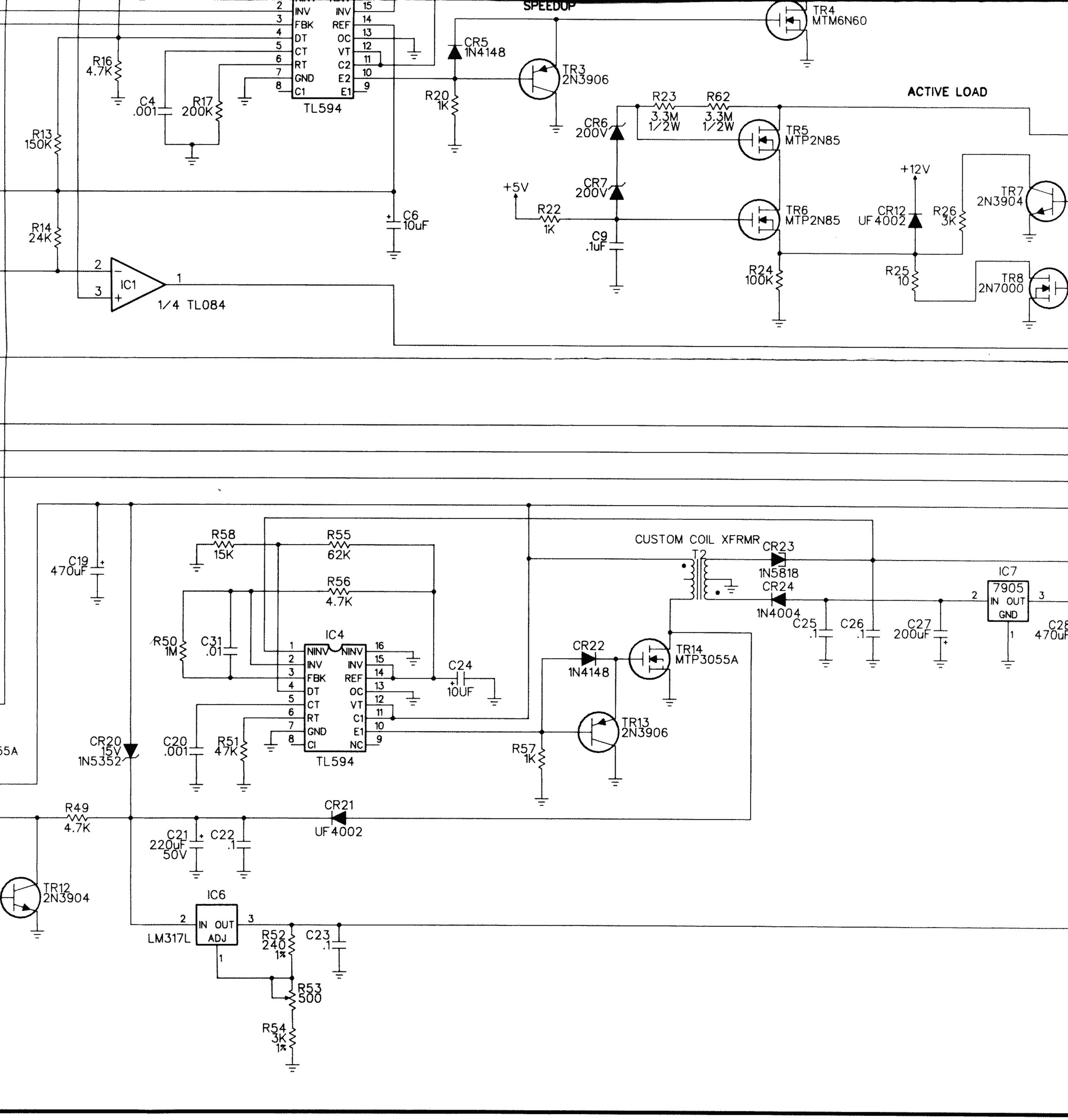

3000 BOARD — LEAKAGE SUPPLY

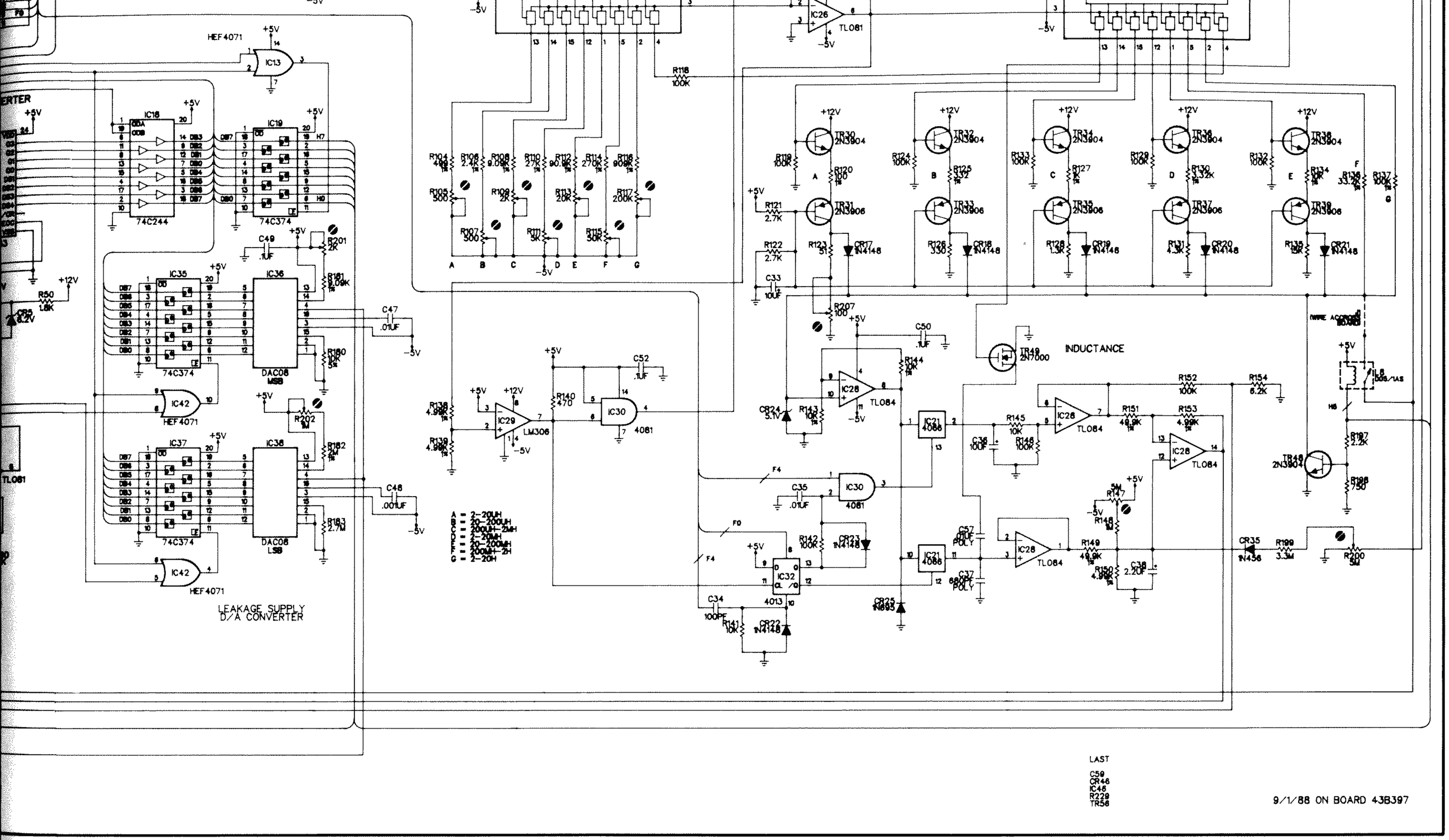
HEF4071
IC13
IC18
IC19
74C244
74C374
IC35
IC36
IC37
DAC08
MSB
LSB
IC42
HEF4071
LEAKAGE SUPPLY
D/A CONVERTER
IC26
TL081
R118
100K
R104
R106
R108
R110
R112
R114
R116
R105
R109
R113
R117
R107
R111
R115
A
B
C
D
E
F
G
IC29
LM306
IC30
4081
IC28
TL084
IC21
4066
IC32
4013
TR30
TR31
TR32
TR33
TR34
TR35
TR36
TR37
TR38
TR39
2N3904
2N3906
CR17
CR18
CR19
CR20
CR21
1N4148
TR40
2N7000
INDUCTANCE
TR48
2N3904
CR35
1N456
CR22
CR23
CR24
5.1V
CR25
6.2V
C33
10UF
C34
100PF
C35
.01UF
C36
100F
C37
C38
2.2UF
C47
.01UF
C48
.001UF
C49
.1UF
C50
.1UF
C52
.1UF
R50
1.8K
R121
2.7K
R122
2.7K
R123
51
R126
330
R207
100
R201
2K
R202
1M
R180
10K
R182
2M
R183
2.7M
R140
470
R141
10K
R142
100K
R143
10K
R144
2K
R145
10K
R147
5K
R148
100
R149
49.9K
R150
4.99K
R151
49.9K
R152
100K
R153
4.99K
R154
6.2K
R197
2.2K
R198
750
R199
3.3M
R200
5M
A = 2-20UH
B = 20-200UH
C = 200UH-2MH
D = 2-20MH
E = 20-200MH
F = 200MH-2H
G = 2-20H
LAST
C59
CR46
IC46
R229
TR58
9/1/88 ON BOARD 43B397

D — MAIN

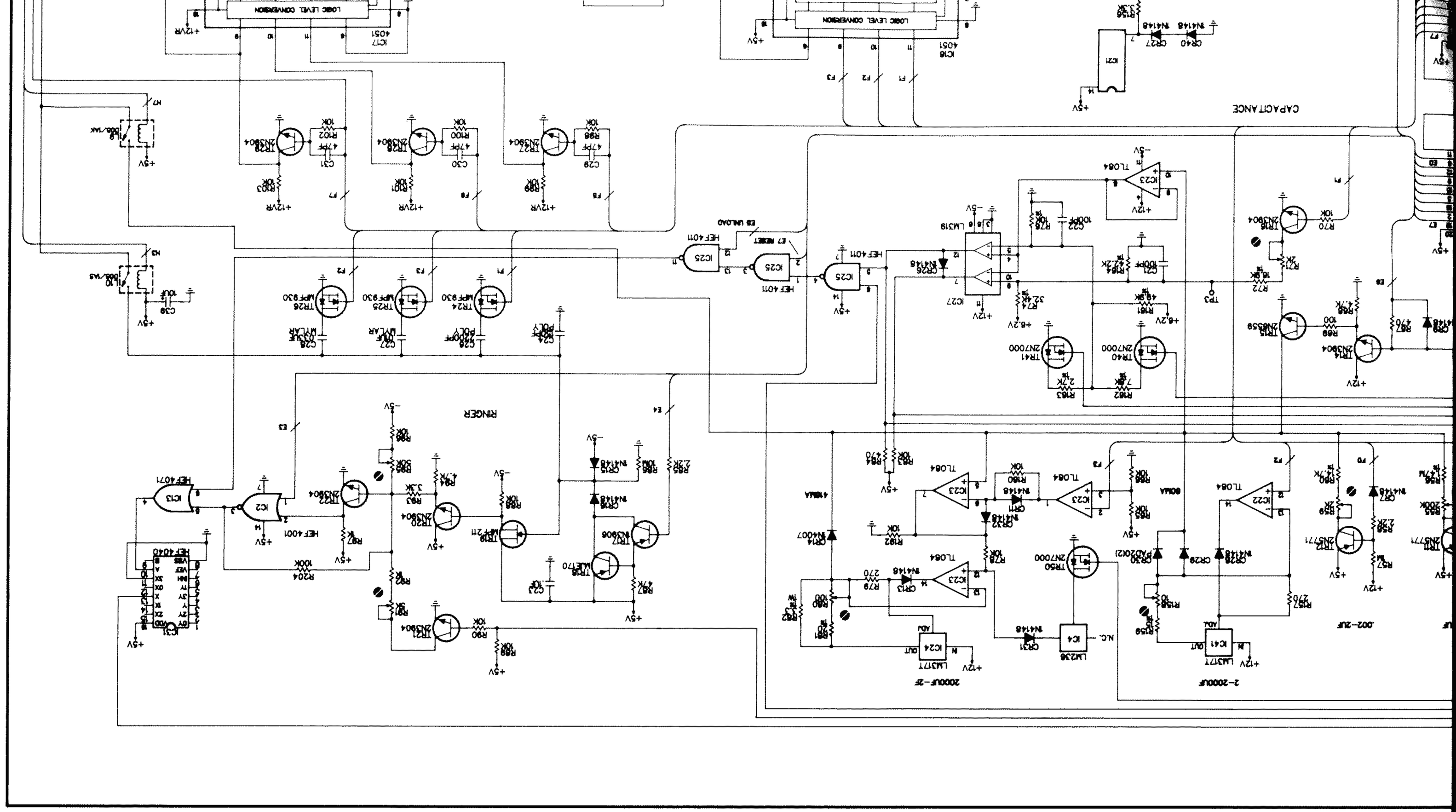
CAPACITANCE
RINGER
LOGIC LEVEL CONVERSION
4051
TL084
LM319
LM317T
LM236
2N3904
2N7000
2N5771
2N5059
1N4148
1N4007
HEF4011
HEF4001
HEF4071
HEF4040
HEF4013
HEF4081
HEF4017
HEF4070
E3 UNLOAD
E7 RESET
2000UF-25
2-2000UF
.002-2UF
+12V
+5V
-5V

MAIN CONTROL
43B307
2000 BOARD

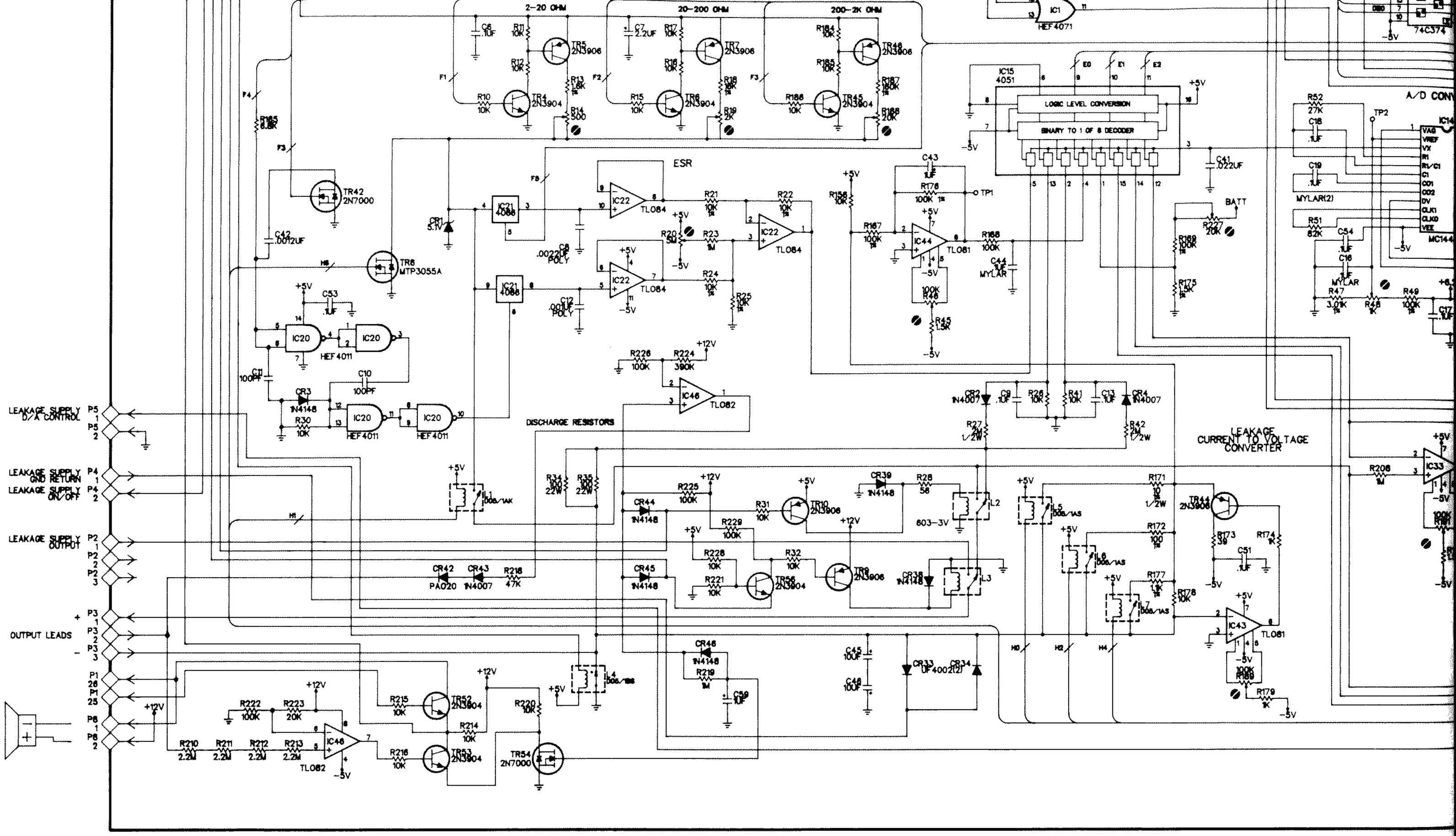
2-20 OHM
20-200 OHM
200-2K OHM
ESR
DISCHARGE RESISTORS
LEAKAGE CURRENT TO VOLTAGE CONVERTER
A/D CONV
LOGIC LEVEL CONVERSION
BINARY TO 1 OF 8 DECODER
LEAKAGE SUPPLY D/A CONTROL
LEAKAGE SUPPLY GND RETURN
LEAKAGE SUPPLY ON/OFF
LEAKAGE SUPPLY OUTPUT
OUTPUT LEADS
HEF4071
HEF4011
TLO84
TLO81
TLO82
74C374
MC144
MYLAR(2)
BATT

LEAKAGE SUPPLY P2
LEAKAGE SUPPLY P4
LEAKAGE GND RETURN P4 1
LEAKAGE SUPPLY P4 2 ON/OFF
LEAKAGE SUPPLY P5 1
D/A CONTROL P5 2
DISCHARGE RESISTORS
CURRENT TO VOLTAGE CONVERTER
LEAKAGE
ESR
200-2K OHM
20-200 OHM
2-20 OHM
BINARY TO 1 OF 8 DECODER
LOGIC LEVEL CONVERSION
WARNING
MAIN DISPLAY CLOCK
VOLTAGE DISPLAY CLOCK
LCD LATCH
LED LATCH
LED DATA
COL 1
COL 2
COL 3
COL 4
COL 5
COL 6
COL 7
COL 8
ROW 1
ROW 2
ROW 3
ROW 4
ROW 5
L/R
CLOCK

AUTO OFF P6.1
EXT. PWR P6.6
P6.0
P6.5
P6.3
P6.4
P6.7
P6.2

+12V
+5V
-5V
+12VR
IC3 78L15 OUT COM C1 .1UF
IC2 HEF4001
R1 22M
C5 2.2UF
C40 .1UF
IC8 80C39
R196 10K
IC10 10K X 5
IC7 74C373
IC9 27C256
IC11 74C374
IC13 HEF4071
IC12 74C374
IC1 HEF4071
TR46 2N3906
R187 100K
R188 20K
IC15 4051
LOGIC LEVEL CONVERSION
BINARY TO 1 OF 8 DECODER
E0 E1 E2
C43 .1UF
R176 100K
TP1
IC44 TL081
R167 100K
R166 100K
C44 .1UF MYLAR
R45 1.5K
100K R46
R169 100K
R175 1.5K
C41 .022UF
BATT
R227 20K

0-.002UF
.002-2UF
2-2000UF
2000UF-2F

+12V LM317T IC41 OUT ADJ
R159 1K
R158 10
R157 270
CR28 1N4148
CR29
CR30 (AD20(2)
IC22 TL084
F2
F0
F5
R53 1M
R54 2.2K
CR6 1N4148
TR11 2N5771
R55 200K
R56 1.47M
R57 1M
R58 2.2K
CR7 1N4148
TR12 2N5771
R59 2K
R60 14.7K
60MA
R65 10K
R66 10K
IC23 TL084
F3
LM236 N.C. IC4
CR31 1N4148
TR50 2N7000
CR11 1N4148
R160 10K
CR32 1N4148
R78 10K
IC23 TL084
IC23 TL084
R192 10K
LM317T IC24 OUT ADJ
CR13 1N4148
R79 270
R83 10K
R84 47

TR14 2N3904
TR15 2N6559
C20 .001UF
CR8 1N4148
R67 470
R69 100
R68 4.7K
E8
R72 16.9K
R71 2K
TR16 2N3904
R70 10K
F1
TP3
R162 7.5K
R163 2.7K
TR40 2N7000
TR41 2N7000
+6.2V
R161 49.9K
C21 100PF
R164 42.2K
R74 32.4K
IC27
CR26 1N4148
C22 100PF
R76 10K
LM319
IC23 TL084

CAPACITANCE
IC21
CR40 1N4148
CR27 1N4148
R158 3.3K
IC16 4051
LOGIC LE
BINARY TO
R104 499
R106 2.4K
R108 9.09K
R110 27K
R112 90.9K
R105 500
R107 500
R109 2K
R111 5K
A B C D

A/D CONVERTER
IC14 MC14433
R52 27K
C18 .1UF
C19 .1UF MYLAR(2)
TP2
R51 82K
C54 .1UF
C16 .1UF MYLAR
R47 3.01K
R48 1K
R49 100K
C17 .1UF
CR5 6.2V
R50 1.8K
IC18 74C244
IC19 74C374
IC35
IC36
R201 2K
C49 .1UF
R181 9.09K
C47 .01UF
R180 10K
HEF4071 IC13

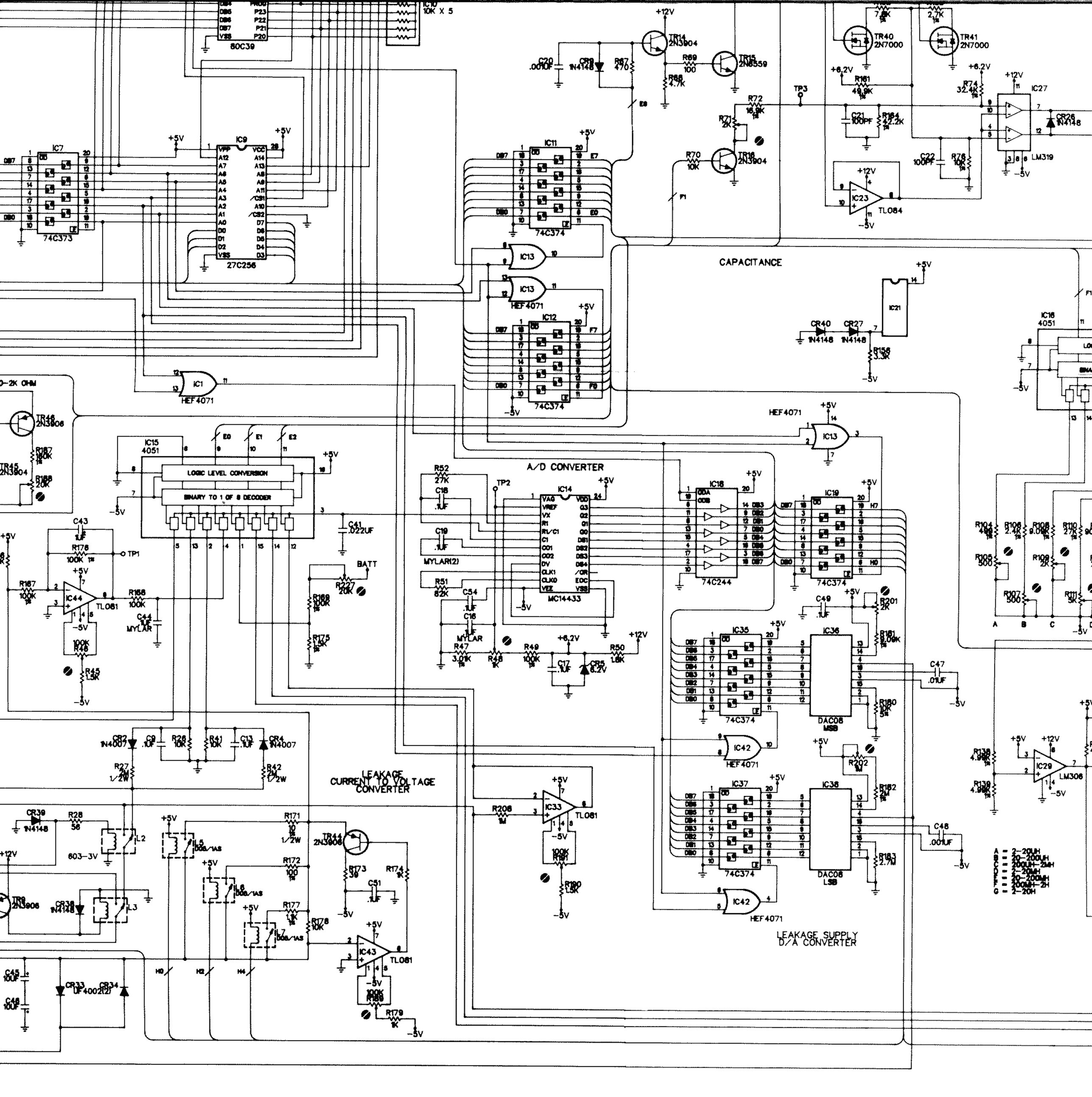

2000 BOARD — MAIN