

Looking for more information?

Visit us on the web at **http://www.artisan-scientific.com** for more information:

• Price Quotations • Drivers • Technical Specifications, Manuals and Documentation

Artisan Scientific is Your Source for Quality New and Certified-Used/Pre-owned Equipment

- Tens of Thousands of In-Stock Items
- Hundreds of Manufacturers Supported
- Fast Shipping and Delivery
- Leasing / Monthly Rentals
- Equipment Demos
- Consignment

Service Center Repairs

Experienced Engineers and Technicians on staff in our State-of-the-art Full-Service In-House Service Center Facility

InstraView™ Remote Inspection

Remotely inspect equipment before purchasing with our Innovative InstraView™ website at **http://www.instraview.com**

We buy used equipment! We also offer credit for Buy-Backs and Trade-Ins

Sell your excess, underutilized, and idle used equipment. Contact one of our Customer Service Representatives today!

Talk to a live person: 888-88-SOURCE (888-887-6872) | Contact us by email: sales@artisan-scientific.com | Visit our website: http://www.artisan-scientific.com

AQ4320 A/B/D

Tunable Laser Source

Instruction Manual

ANDO ELECTRIC CO., LTD.

© Copyright ANDO ELECTRIC CO., LTD. JAPAN 1999

AS-62517-1 Rev. 1.8

Artisan Scientific - Quality Instrumentation ... Guaranteed | (888) 88-SOURCE | www.artisan-scientific.com

Artisan Scientific - Quality Instrumentation ... Guaranteed | (888) 88-SOURCE | www.artisan-scientific.com

Initial Safety Information for Laser Source

The Specifications are as follows:

	AQ4320A	AQ4320B	AQ4320D
Laser Type	EC-Laser(*1) InGaAsP	EC-Laser(*1) InGaAsP	EC-Laser(*1) InGaAsP
Laser Class According to EN60825-1:1994+All:1996	3A	3A	3A
Output Power	+10dBm(typical)	>-3dBm	+7dBm(typical)
Beam Diameter	10 μ m	10 μ m	10 μ m
Numerical Aperture	0.1	0.1	0.1
Wavelength	1480 to 1580nm	1500 to 1580nm	1520 to 1620nm

(*1) As for EC-Laser , External Cavity Laser is abbreviated.

Note





Check that the wavelength and light emission written on the attached safety caution seal (the same as the one in the center on the above) satisfy the above specifications.

Artisan Scientific - Quality Instrumentation ... Guaranteed | (888) 88-SOURCE | www.artisan-scientific.com

You MUST return instruments with malfunctioning laser boxes to Service Center for repair and calibration.

WARNING

Use of controls or adjustments or performance of procedures other than those specified for the laser source may result in hazardous radiation exposure.

WARNING

Refer Servicing only to qualified and authorized personnel

WARNING

Do not emit a laser light when an optical fiber is not connected on the optical output connector.
The optical output connector is located on the front panel.
The laser light is emitted when "LD ON/OFF" button is pressed.
"LD ON/OFF" button is located on the front panel ,just left side of the optical output connector.
A green LED on the front panel goes on while a laser light is emitted.

WARNING

Under no circumstances look into the end of an optical cable attached to the optical output when the device is operational.
The laser radiations not visible to the human eye, but it can seriously damage your eyesight.

Artisan Scientific - Quality Instrumentation ... Guaranteed | (888) 88-SOURCE | www.artisan-scientific.com

WARRANTY

All Ando Electric's products have been inspected with our severe quality assurance standards. However, if any defect or trouble occurring during transportation is found, contact to our service agency.

Do not repair a defective ANDO's product by yourself in order to avoid any physical damage. A repair of defective ANDO's product must be performed by a service engineer approved by ANDO ELECTRIC CO.,LTD.

Ando Electric will replace, at no charge, the defective product(s) that occur within one year of the original date of product delivery.

However, the defects due to an operation error, modification or retrofit by the customer, or those caused by the natural disasters are serviced with charge.

Artisan Scientific - Quality Instrumentation ... Guaranteed | (888) 88-SOURCE | www.artisan-scientific.com

Hazard Identification

This manual uses the following hazard identification markings that the operators and service personnel must be aware of all hazards associated with this system.

1. Dangers, Warnings, Cautions, and Notes

(1) Priority of hazard information

The priority of hazard information is as follows:

Dangers > Warnings > Cautions > Notes

(2) Meanings of hazard information

Danger: Identifies immediate hazards that will result in death or severe personal injury. This is the highest priority hazard identification marking.

Warning: Identifies hazards or unsafe practices that can result in severe personal injury.

Caution: Identifies hazards or unsafe practices that can result in damage to system units or can "interrupt" system operations.

Note: Identifies an auxiliary information about exceptional rules, corrections, and restrictions.

2. Reference Pages

The page or pages that you should refer to are shown.
An example of "See Page 2-1".

3. Pictorials of Operation Keys

This manual shows the system operation keys as follows:

[ ] : Indicates a panel switch.
< > : Indicates a soft key.

Artisan Scientific - Quality Instrumentation ... Guaranteed | (888) 88-SOURCE | www.artisan-scientific.com

○ Read this manual and the precautions for safety in it carefully before using the device.
○ Maintain this manual at a location easy to access.

Precautions for Safety

This manual employs the following safety alert symbols to provide basic safety rules and precautions. They are intended to ensure correct use of the product and thus to prevent personal injury that could occur to your or other persons and physical damage. The meaning of the safety alert symbols are as follow.

Please take the time to familialize yourself with this section before going to other sections of this manual.

- Safety precautions and rules to be observed are identified with the following safety alert symbols:



This symbol represents safety precautions or rules (including Warning and Danger notices) that require users' attention.
(Actual "Signal Word" is entered inside the symbol.)



This symbol represents safety precautions or rules users must observe.
(Actual "Signal Word" is entered inside the symbol.)



This symbol represents banned user actions.

- Sample safety alert symbols

 **WARNING**	This symbol identifies hazards which can result in death or serious personal injury if this warning is unheeded and the system is improperly handled or operated.

 **CAUTION**	This symbol identifies hazards which can result in personal injury or physical damage if this caution is unheeded and the system is improperly handled or operated.

Artisan Scientific - Quality Instrumentation ... Guaranteed | (888) 88-SOURCE | www.artisan-scientific.com

	This symbol identifies hazards which can result in fuming or fire hazard if this caution or safety rule is unheeded and they system is improperly handled or operated.
	This symbol identifies hazards which can result in electric shock if this precaution or safety rule is unheeded and the system is improperly handled or operated.
	This symbol identifies hazards which can result in bodily hurt if this precaution or safety rule is unheeded and the system is improperly handled or operated.
	This symbol instructs to remove the power plug from the plug outlet to ensure work safety.
	This symbol identifies general safety rules to be observed by users.

1. Restrictions on the Operating Environment

	Take care so that water may not flow into the system or the system may not be exposed to water, otherwise fire hazard, electric shock or system failure can result.
	Connect the system to the ground before starting it up, otherwise electric shock or system damage can result.

2. Restrictions on the Operating Conditions

	Don't operate the system at any other voltages than the specified, otherwise fire hazard, electric shock or system failure can result.
	When this system is operated on the supply mains, it must be directly connected to the dedicated plug outlet.
	Don't use an extension cord since it can cause overheat and thus fire hazard.

Artisan Scientific - Quality Instrumentation ... Guaranteed | (888) 88-SOURCE | www.artisan-scientific.com

3. Setup and Installation Work

3.1 Precautions intended for setup and installation personnel

	Avoid disorderly, complex wiring from the power supply, otherwise cable overheating or fire hazard can result.
	Insert the power plug securely to the plug outlet, otherwise fire hazard or electric shock can result if a metal piece touches the power plug.

3.2 Restrictions and bans on the installation environment and conditions

	Don't install the system into a highly humid or dusty place, otherwise electric shock or system failure can result.
	Don't install the system on an unstable base or inclined place, otherwise personal injury can result when it falls or tumbles down.
	Don't install the system in a place exposed to severe vibrations or shocks, otherwise personal injury can result when it falls or tumbles down.
	Don't insert or drop a metal bar from the system openings, otherwise fire hazard, electric shock or other personal injury can result.
	Keep the power cord away from the heating units, otherwise fire hazard or electric shock can result from the damaged coating.
	Hold the plug portion when pulling the power cord out of the outlet, otherwise fire hazard or electric shock can result from the damaged cord.
	Don't handle the power cord with wet hands, otherwise electric shock can result.
	Don't place the system in a high temperature environment such as a place exposed to direct sunlight or inside of a vehicle, otherwise system failure can result from overheating of inside the system.

Artisan Scientific - Quality Instrumentation ... Guaranteed | (888) 88-SOURCE | www.artisan-scientific.com

3.3 Banned actions in the system installation

	Don't try to move the system without making sure that the power plug has been removed from the plug outlet and external connection cables have been disconnected.
	Don't block the system ventilation hole, otherwise fire hazard can result from the entrapped heated air inside the system.
	Don't damage or rework the power cord, otherwise fire hazard or electric shock can result from the cord damaged by heavy substance placed on it, excessive heat or tension applied to it.

4. Precautions Before Starting the System

Please read this instruction manual carefully and familiarize yourself with the information provided in it.

Artisan Scientific - Quality Instrumentation ... Guaranteed | (888) 88-SOURCE | www.artisan-scientific.com

5. Usage

	Operate the system in accordance with the procedure provided in the instruction manual.
	When a safety alert symbol (Warning, Danger or Caution mark) is provided, operation instructions provided in the manual must be heeded.
	Area surrounding the system must be free of a water filled container or metal pieces, otherwise fire hazard, electric shock or system failure can result from the spilt water or dropped metal piece.
	Don't rework the power cord nor forcibly bend, twist or pull it, otherwise fire hazard or electric shock can result.
	Don't try to disassemble or retrofit the system, otherwise fire hazard, electric shock or bodily injury can result.
	When the system is not to be used for a long period of time, remove the power plug from the plug outlet to ensure safety, otherwise fire hazard, electric shock or system failure car result from lightning.
	Use caution when opening or closing doors on the system so that your fingers may not be pinched.
	The power plug must be removed from the plug outlet whenever a fuse replacement takes place, otherwise electric shock or the system damage due to shorting can result.
	Don't use any fuse other than one having the specified rating and property, use of a short bar can aggravate should an accident happened. It can also cause fire hazard.

6. Maintenance and Inspection

Periodic system maintenance and inspection is recommended.

When you have any question on the maintenance or inspection, contact us at the list attached to the end of this manual.

	Dusts settled inside the system for a long period can cause fire hazard or system failure.

Artisan Scientific - Quality Instrumentation ... Guaranteed | (888) 88-SOURCE | www.artisan-scientific.com

7. Actions Required for a System Failure

	If the power cord is damaged, contact us for its replacement. Continued use of such cord can cause fire hazard or electric shock.
	Should a foreign substance dropped into the system, turn the system power off first, then remove the power cord from the plug outlet and contact us. Fire hazard, electric shock or system failure can result from continued use of the system in such state.
	Should an abnormal state such as fume, smoke or offensive odor is detected on the system, turn the system power switch off immediately, then remove the power plug from the plug outlet. Making sure that fume or smoke is not present any more, contact us for repair. Continued use of the system in such state can result in fire hazard, electric shock or system failure. Never try to fix the trouble on your own. It is an extremely dangerous try.
	Should the system is dropped or damaged, turn the system power off, remove the power plug from the plug outlet, then contact us. Continued use of the system in such state can result in fire hazard, electric shock or system failure.
	Should the system failed, customers strongly advised not to try fix the failure, otherwise electric shock or personal injury can result. Our warranty is not applicable to the system repaired without previous notice to and consent from us.

8. Precautions on Disposal

	Don't place the system in fire for its disposal, otherwise fire hazard or burn can result if it exploded.

Artisan Scientific - Quality Instrumentation ... Guaranteed | (888) 88-SOURCE | www.artisan-scientific.com

Table of Contents

Chapter 1 Outline 1-1
1.1 System Outline 1-1
1.2 Specifications 1-2
1.3 Configuration 1-6

Chapter 2 Before Use 2-1
2.1 Unpacking and Acceptance Inspection 2-1
2.1.1 Acceptance inspection 2-1
2.1.2 Operation checkout 2-1
2.2 If a Damage or a Problem is found 2-1
2.3 Re-packing 2-2
2.4 Safety Precautions of Electrical System 2-3
2.4.1 Polarity of power cord 2-3
2.4.2 Protection by grounding 2-4
2.4.3 Replacing the fuses 2-5
2.4.4 Exchange of built-in battery 2-6

Chapter 3 PRECAUTIONS ON OPERATION 3-1
3.1 Operating Temperature Range 3-1
3.2 Environmental Conditions 3-1
3.3 Precautions on Handling 3-2
3.4 Precautions for Using Optical Parts 3-3
3.5 Precautions for Outputting Stable Light 3-4

Chapter 4 FUNCTION 4-1
4.1 Operation Unit 4-1
4.2 Display Screen (LCD) 4-4
4.2.1 Main Screen 4-4
4.2.2 LCD Setting Screen 4-7
4.3 Keyboard operation 4-9

Chapter 5 OPERATION 5-1
5.1 Before Operation 5-1
5.1.1 Opening and Closing of Connector Protection Cap 5-2

Artisan Scientific - Quality Instrumentation ... Guaranteed | (888) 88-SOURCE | www.artisan-scientific.com

5.1.2 Connecting and Removing of Connector Adapter ——— 5-2
5.1.3 Cleaning of Light Output Part ····· 5-3
5.2 Turning on and Checking ····· 5-5
5.3 Turning off ····· 5-6
5.4 How to Operate ····· 5-7
5.4.1 Common Operating Method ····· 5-7
5.4.2 Software Key Main Menu ····· 5-9
5.4.3 SWEEP MENU ····· 5-11
5.4.4 OFFSET ····· 5-14
5.4.5 TLS SET ····· 5-19
5.4.6 PROGRAM ····· 5-23
5.4.7 SYSTEM ····· 5-34
5.5 Error Message ····· 5-49

Chapter 6 Remote Control ····· 6-1
6.1 GPIB control ····· 6-1
6.1.1 Interface functions ····· 6-1
6.1.2 Explanation of basic system functions ····· 6-2
6.1.3 GPIB and RS-232C interface commands ····· 6-4
6.1.4 Notes in CFORM1 ——— 6-15
6.1.5 Notes in CFORM2 ——— 6-20
6.2 RS-232C Interface Control ····· 6-23
6.2.1 RS-232C interface commands ····· 6-23
6.2.2 Explanation of basic functions ····· 6-23
6.3 Sample Programs ····· 6-25

Chapter 7 System Circuits and Structure ····· 7-1
7.1 System Circuits ····· 7-1
7.2 Structure ····· 7-3

Chapter 8 Operation Principle ····· 8-1
8.1 Variable Wavelength Measurement ····· 8-1
8.2 Reference Wavelength ····· 8-2
8.3 About the optical output control of AQ4320 ——— 8-3

Chapter 9 Troubleshooting Guide ····· 9-1

Artisan Scientific - Quality Instrumentation ... Guaranteed | (888) 88-SOURCE | www.artisan-scientific.com

Chapter 10 Maintenance 10-1
10.1 Instruments and Tools required 10-1
10.2 Periodical Inspection 10-1
10.3 Cleaning 10-2

Figure and Table contents

Fig. 2-1: Three-pole power cord 2-3
Fig. 2-2: Replacing the power fuses 2-5

Fig. 4-1: Operation unit arrangement 4-1
Fig. 4-2: Main screen status where all LCDs come on 4-4
Fig. 4-3: LCD screen color setting screen 4-7

Fig. 5-1: How to open/close connector protection cap 5-2
Fig. 5-2: How to connect/remove connector adapter 5-2
Fig. 5-3: How to clean optical connector connection 5-3
Fig. 5-4: How to clean light output part 5-3
Fig. 5-5: Password entry screen 5-5
Fig. 5-6: Initial screen 5-6
Fig. 5-7: Program select screen 5-24
Fig. 5-8: Program execution screen 5-25
Fig. 5-9: EDIT screen 5-26
Fig. 5-10: Command select screen 5-28
Fig. 5-11: File menu screen 5-36
Fig. 5-12: File name entry screen 5-40
Fig. 5-13: Drive change screen 5-42
Fig. 5-14: Directory name entry screen 5-43

Fig. 7-1: shows the AQ4320 system block diagram 7-2

Fig. 8-1: External resonator structure 8-1
Fig. 8-2: Vertical mode signals of external resonator 8-2

Table 1-1: AQ4320 specifications 1-2

Artisan Scientific - Quality Instrumentation ... Guaranteed | (888) 88-SOURCE | www.artisan-scientific.com

Table 1.2: List of AQ4320 accessories 1-4

Table 2-1: Power fuse 2-5

Table 4-1: Operation unit name and function 4-2
Table 4-2: Contents of main screen display 4-5
Table 4-3: Setting and contents of LCD screen color 4-8
Table 4-4: Screen color adjusting item 4-8
Table 4-5: Correspondence table of AQ4320 operation part and keyboard operation 4-9

Table 5-1: Range of setting of wavelength/optical frequency (A/B/D) 5-16
Table 5-2: Program command list 5-29
Table 5-3: Typical programs 5-33
Table 5-4: Error code list 5-49

Table 6-1: GPIB interface functions 6-1
Table 6-2: SRQ status byte 6-3
Table 6-3: GPIB and RS-232C interface commands (supported by AQ4320) 6-5
Table 6-4: GPIB and RS-232C interface commands
(Comparison with competitor's commandsCFORM1) 6-16
Table 6-5: Command that is not supported by CFORM1 in AQ4320 6-18
Table 6-4: GPIB and RS-232C interface commands
(Comparison with competitor's commands CFORM2) 6-21
Table 6-5: Command that is not supported by CFORM2 in AQ4320 6-22
Table 6-6: Initial values for RS-232C interface communication 6-23
Table 6-7: RS-232C interface response 6-24

Table 10-1: List of test instruments 10-1

Artisan Scientific - Quality Instrumentation ... Guaranteed | (888) 88-SOURCE | www.artisan-scientific.com

Attached diagram table

Applying Figure 1: AQ4320 screen menu system chart

AQ4320A wavelength changeable source of light Externals chart		ASD-62517-1-1/3
	Externals chart (Front chart)	2/3
	Externals chart (The back chart)	3/3

Note

The externals chart attached to this manual is only AQ4320A . It is common in all models excluding the model name . Read in a different way and use the model name.

Artisan Scientific - Quality Instrumentation ... Guaranteed | (888) 88-SOURCE | www.artisan-scientific.com

Chapter 1 Outline

This publication explains how to use the AQ4320A/B/D variable wavelength optical source (called the "AQ4320 system").

1.1 System Outline

The AQ4320 system is the highly reliable optical source whose emission wavelength can be adjusted highly accurately. Its variable wavelength covers the WDM communication bandwidth in the 1480 to 1580-nm (AQ4320A), 1500 to 1580-nm (AQ4320B) or 1520 to 1620-nm (AQ4320D) range.

The AQ4320 system is appropriate to optical amp measurement as its optical output is not interrupted even when its wavelength or optical output is changed. The system has the excellent basic performance such as high-speed sweep, stability, high SMSR and narrow linewidth. Its various wavelength sweep and optical output modulation are available. Also, fully remote control via GPIB or RS-232C interface is available.

Artisan Scientific - Quality Instrumentation ... Guaranteed | (888) 88-SOURCE | www.artisan-scientific.com

1.2 Specifications

Table 1-1 lists the AQ4320 system specifications.

Table 1-1: AQ4320 specifications (1 of 5)

Model		AQ4320A	Note
Wavelength changeable width		1480 to 1580nm	
Wavelength resolution		0.001nm	
Absolute wavelength accuracy		±0.1nm	
Relative wavelength accuracy		±0.035nm[typ]	
Wavelength stability		±100MHz/h (±0.8pm/h)[typ]	
Width of spectrum line	When NARROW is set	1MHz or less	Note 1
		200kHz[typ]	Note 1
	When WIDE is set	200MHz or more	Note 1
SMSR		>50dB	Note 1,Note 2 : Optical output = maximum optical output -3dB
Deflection wavelength extinction coefficient		>15dBm	Note 3:25℃,With the panel side connector output point
Optical output	1550nm	+10dBm[typ] ,>+8dBm	Note 1 25℃,With 2m fiber connection output point
	1520 to 1570nm	>+7dBm	
	1500 to 1580nm	>+5dBm	
	1480 to 1580nm	>+3dBm	
Optical, changeable attenuation function		3dB(0.1dB step)	Note 1
Optical output stability	For five minutes	<±0.01dB	Note 1,Note 5 : 25℃ fixed temperature.
	For one hour	<±0.05dB	Note 1,Note 6 : Within ±1℃ of 10 to 35℃
	For eight hours	<±0.3dB	Note 1,Note 7 : 10 to 35℃
Optical output accuracy		<±1dB	Note 1
Optical output repeatability		±0.04dB	Note 1,Note 8 : Optical output level fixation
Optical output flatness		±0.1dB	Note 1,Note 9 : 1500 to 1580nm, Optical output = (maximum optical output -3dB)
RIN		-145dB/Hz[typ]	
Internal modulation (CHOP)	Set frequency	0.2kHz to 300kHz	
	Set resolution	10Hz,100Hz,1kHz,10kHz,100kHz	
External modulation (CHOP)	Set frequency	0.2kHz to 300kHz	
	Set resolution	-	
Direct modulation	Modulation frequency	100kHz to 300MHz	
	Modulation degree	< 5%	
	Modulation input level	< 0dBm	
Wavelength sweep speed		100nm/sec (maximum)	
Applicabile fiber		PMF (10/125 μ m)	
Deflection wavelength output direction		Fig. 1-1	
Applicablle optical connector		FC/PC,Amount of optical reflection attenuation=50dBm or more	
Dimensions		Approx.177(H)×425(W)×450(D) mm	
Weight		Approx.20kg	
Range of operation temperature		+10 to +35℃	
Range of storage temperature		-10 to +50℃	
Power supply	Range of voltage	100 to 120VAC or 200 to 240VAC	
	Frequency	50/60Hz	
	Consumption electric power	Approx.150VA	
Attached goods		Instruction manual : 1 Power cord : 1 Floppy disks : 2 AQ9441(FC)connector adapter : 1 50-ohm terminator : 1	

Note 1 : With the CW light and 2m fiber output point

Note 10 : Consult us for other connectors

Artisan Scientific - Quality Instrumentation ... Guaranteed | (888) 88-SOURCE | www.artisan-scientific.com

Table 1-1: AQ4320 specifications (2 of 5)

Model		AQ4320B	Note
Wavelength changeable width		1500 to 1580nm	
Wavelength resolution		0.001nm	
Absolute wavelength accuracy		±0.1nm	
Relative wavelength accuracy		±0.035nm[typ]	
Wavelength stability		±100MHz/h (±0.8pm/h)[typ]	
Width of spectrum line	When NARROW is set	1MHz or less	Note 1
		200kHz[typ]	Note 1
	When WIDE is set	200MHz or more	Note 1
SMSR		>70dB	Note 1,Note 2 : Optical output = maximum optical output -3dB
Optical output	1550nm	>-3dBm	Note 1
	1520 to 1570nm	>-6dBm	Note 1
	1500 to 1580nm	>-10dBm	Note 1
	1480 to 1580nm	-	Note 1
Optical, changeable attenuation function		>20dB(0.1dB step)	Note 1
Optical output stability	For five minutes	<±0.01dB	Note 1,Note 3 : 25℃ fixed temperature.
	For one hour	<±0.05dB	Note 1,Note 4 : Within ±1℃ of 10 to 35℃
	For eight hours	<±0.3dB	Note 1,Note 5 : 10 to 35℃
Optical output accuracy		<±1dB	Note 1
Optical output repeatability		±0.04dB	Note 1,Note 6 : Optical output level fixation
Optical output flatness		±0.1dB	Note 1,Note 7 : 1500 to 1580nm, Optical output = (maximum optical output -3dB)
RIN		-145dB/Hz[typ]	
Internal modulation (CHOP)	Set frequency	0.2kHz to 300kHz	
	Set resolution	10Hz,100Hz,1kHz,10kHz,100kHz	
External modulation (CHOP)	Set frequency	0.2kHz to 300kHz	
	Set resolution	-	
Direct modulation	Modulation frequency	100kHz to 300MHz	
	Modulation degree	< 5%	
	Modulation input level	< 0dBm	
Wavelength sweep speed		100nm/sec (maximum)	
Applicablle fiber		SMF (10/125 μ m)	
Applicablle optical connector		FC/PC,Amount of optical reflection attenuation=50dBm or more	
Dimensions		Approx.177(H)×425(W)×450(D) mm	
Weight		Approx.20kg	
Range of operation temperature		+10 to +35℃	
Range of storage temperature		-10 to +50℃	
Power supply	Range of voltage	100 to 120VAC or 200 to 240VAC	
	Frequency	50/60Hz	
	Consumption electric power	Approx.150VA	
Attached goods		Instruction manual : 1 Power cord : 1 Floppy disks : 2 AQ9441(FC)connector adapter : 1 50-ohm terminator : 1	

Note 1 : With the CW light and 2m fiber output point

Note 8 : Consult us for other connectors

Artisan Scientific - Quality Instrumentation ... Guaranteed | (888) 88-SOURCE | www.artisan-scientific.com

Table 1-1: AQ4320 specifications (3 of 5)

Model		AQ4320D	Note
Wavelength changeable width		1520 to 1620nm	
Wavelength resolution		0.001nm	
Absolute wavelength accuracy		±0.1nm	
Relative wavelength accuracy		±0.035nm[typ]	
Wavelength stability		±100MHz/h (±0.8pm/h)[typ]	
Width of spectrum line	When NARROW is set	1MHz or less	Note 1
		200kHz[typ]	Note 1
	When WIDE is set	200MHz or more	Note 1
SMSR		>50dB	Note 1,Note 2 : Optical output = maximum optical output -3dB
Optical output	PEAK	>+7dBm[typ]	Note 1
	1560 to 1600nm	>+6dBm	Note 1
	1540 to 1620nm	>+5dBm	Note 1
	1520 to 1620nm	>+3dBm	
Optical, changeable attenuation function		>20dB(0.1dB step)	Note 1
Optical output stability	For five minutes	<±0.01dB	Note 1,Note 3 : 25℃ fixed temperature.
	For one hour	<±0.05dB	Note 1,Note 4 : Within ±1℃ of 10 to 35℃
	For eight hours	<±0.3dB	Note 1,Note 5 : 10 to 35℃
Optical output accuracy		<±1dB	Note 1
Optical output repeatability		±0.04dB	Note 1,Note 6 : Optical output level fixation
Optical output flatness		±0.1dB	Note 1,Note 7 : 1500 to 1580nm, Optical output = (maximum optical output -3dB)
RIN		-145dB/Hz[typ]	
Internal modulation (CHOP)	Set frequency	0.2kHz to 300kHz	
	Set resolution	10Hz,100Hz,1kHz,10kHz,100kHz	
External modulation (CHOP)	Set frequency	0.2kHz to 300kHz	
	Set resolution	-	
Direct modulation	Modulation frequency	100kHz to 300MHz	
	Modulation degree	< 5%	
	Modulation input level	< 0dBm	
Wavelength sweep speed		100nm/sec (maximum)	
Applicablle fiber		SMF (10/125μm)	
Applicablle optical connector		FC/PC,Amount of optical reflection attenuation=50dBm or more	
Dimensions		Approx.177(H)×425(W)×450(D) mm	
Weight		Approx.20kg	
Range of operation temperature		+10 to +35℃	
Range of storage temperature		-10 to +50℃	
Power supply	Range of voltage	100 to 120VAC or 200 to 240VAC	
	Frequency	50/60Hz	
	Consumption electric power	Approx.150VA	
Attached goods		Instruction manual : 1 Power cord : 1 Floppy disks : 2 AQ9441(FC)connector adapter : 1 50-ohm terminator : 1	

Note 1 : With the CW light and 2m fiber output point

Note 8 : Consult us for other connectors

Artisan Scientific - Quality Instrumentation ... Guaranteed | (888) 88-SOURCE | www.artisan-scientific.com

Table 1-1: AQ4320 specifications (4 of 5)

Option : AQ9441(SC) Connector adaptor AQ9441(ST) Connector adaptor

Table 1-1: AQ4320 specifications (5 of 5)

Model	Note
Display	6.5"color LCD panel
GP-IB	IEEE488.1 satisfied
RC-232C	Cross cable supported
KEY BOARD input	IBM compatible
DISPLAY output	A VGA color display with 16-color or more color display is supported.
PRINTER output	NEC's PC-PR201, Epson's ESC/P, Canon's LIPS II, and Postscript printers are satisfied.
CHOP signal output (CHOP OUT)	BNC connector, positive logic, TTL output
External CHOP signal input (EXT CHOP IN)	BNC connector, positive logic, TTL input, and 5V MAX
TLS analog modulation input (TLS ANALOG MODULATION)	SMA connector Input impedance 50Ω Modulation ratio:5%(typ) when the modulation frequency 10MHz, modulation power 0dBm, maximum optical power at 1550nm. Maximum modulation power level is +0dBm.
Analog Out (wavelength)	BNC connector, 1.5kΩ or less of output impedance, approximately 0 to 2 V at 10kΩ terminal from sweep start wavelength (optical signal frequency) to sweep end wavelength (optical signal frequency)

Artisan Scientific - Quality Instrumentation ... Guaranteed | (888) 88-SOURCE | www.artisan-scientific.com

1.3 Configuration

The AQ4320 consists of the following standard and optional accessories.

Table 1.2: List of AQ4320 accessories

No.	Accessory name	Qty	Description
1	Instruction manual	1	
2	Floppy disks	2	
3	FC connector adapter	1	Mounted on the [OPT OUT] section (Fig.4-1 ⑧) of the front panel.
4	Power cord	1	Terminated with a three-pole power plug.
5	50-ohm terminator	1	Mounted on the [REMOTE SW CONNECTOR] section (Fig.4-1 ⑪) of the rear panel.
6	Dust cover (for TLS ANALOG MODULATION connector)	1	Mounted on the [TLS ANALOG MODULATION] section (Fig.4-1 ⑫) of rear panel.
7	Dust cover (for display panel)	1	Mounted on the [DISPLAY] section (Fig.4-1 ⑲) of rear panel.
8	Dust cover (for printer)	1	Mounted on the [PRINTER] section (Fig.4-1 ⑳) of rear panel.
9	Dust cover (for EXT I/O terminals)	1	Mounted on the [EXT I/O] section (Fig.4-1 ㉑) of rear panel.
10	Dust cover (for "|0|0|" section)	1	Mounted on the [|0|0|] section (Fig.4-1 ㉒) of rear panel.
11	Dust cover (for GPIB interface)	1	Mounted on the [GP-IB] section (Fig.4-1 ㉓) of rear panel.

Artisan Scientific - Quality Instrumentation ... Guaranteed | (888) 88-SOURCE | www.artisan-scientific.com

Chapter 2 Before Use

This chapter explains the unpacking and re-packing procedures, acceptance inspection, and general notes you must use. Follow these instructions before using your AQ4320 system.

2.1 Unpacking and Acceptance Inspection

All of AQ4320 components have been tested mechanically and electrically and their normal operations are assured at factory. When delivered, you must unpack and check for AQ4320 components for a shortage and a damage occurring during transportation. Take care not to damage wooden containers, cushion materials and fiberboard containers so that you can reuse them when transporting the AQ4320 in future.

2.1.1 Acceptance inspection

Check the appearance, switch operations, and controls of AQ4320 for any damage or malfunction occurring during transportation. Also, check the inventory of accessories using the packing list.

2.1.2 Operation checkout

After inventory checkout, check the basic system operations.

2.2 If a Damage or a Problem is found

If you have found a damage of AQ4320 system or any difference from specifications during acceptance inspection, contact to our agency immediately.

Artisan Scientific - Quality Instrumentation ... Guaranteed | (888) 88-SOURCE | www.artisan-scientific.com

2.3 Re-packing

If you transport your AQ4320 again, reuse its containers you keep in your place. If you have lost them or if these containers are damaged, use the following re-packing procedure.

(1) Wrap all of AQ4320 components using the heavy-duty paper sheets or polyethylene sheets. Protect each corner of components using cushion materials.

(2) Place all AQ4320 components in appropriate wooden or fiberboard containers. There should be a space approximately 5 to 10 cm between the each component and container wall.

(3) Use enough amounts of polyurethane forms and other cushion materials to protect the AQ4320 components in each container. The components may be damaged due to mechanical shock and vibration if not protected securely.

(4) If you have placed the AQ4320 components in wooden containers, seal the containers using steel bands. If you use the fiberboard containers, seal them using adhesive tapes or others.

(5) Attach a label showing the following names to each container for easy identification.

- Contents
- Destination address and name
- Consignor

Artisan Scientific - Quality Instrumentation ... Guaranteed | (888) 88-SOURCE | www.artisan-scientific.com

2.4 Safety Precautions of Electrical System

The AQ4320 system operates normally when connected to the 100 to 120VAC or 200 to 240VAC (50/60Hz) power source. Use the following safety instructions to avoid the listed problems.

Possible problems:

- Electrical shock
- Component damage due to abnormal voltage
- Other problems due to ground current.

2.4.1 Polarity of power cord

Plug the AQ4320 power cord into the three-pole receptacle. As Fig. 2-1 shows, the power cord has the "L" (Live line), "N" (Neutral line), and Ground rod (for grounding). You can match the power polarities by plugging the power cord into receptacle.

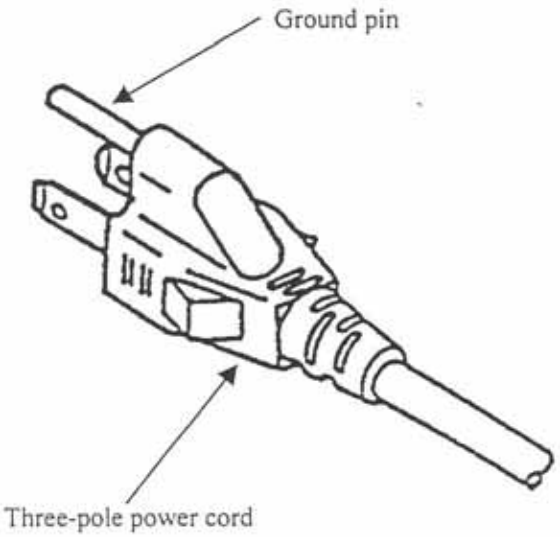

Fig. 2-1: Three-pole power cord

Artisan Scientific - Quality Instrumentation ... Guaranteed | (888) 88-SOURCE | www.artisan-scientific.com

2.4.2 Protection by grounding

(1) Grounding by three-pole power cord

If the three-pole receptacle is available, you can match the polarities of power cord by just plugging the power cord into the receptacle. The AQ4320 cabinet is grounded.

Artisan Scientific - Quality Instrumentation ... Guaranteed | (888) 88-SOURCE | www.artisan-scientific.com

2.4.3 Replacing the fuses

The power fuses are mounted in the AC LINE connector module of the AQ4320 rear panel. Table 2-1 gives the fuse specifications, and Fig. 2-2 gives the fuse replacement procedure.

Table 2-1: Power fuse

Power voltage	Power fuse	Remarks
100 to 120VAC	F 3.15A, 250V	Glass tube fuses (5.2mm dia by 20mm long), quick action type
200 to 240VAC		

Pull out the fuse holder.

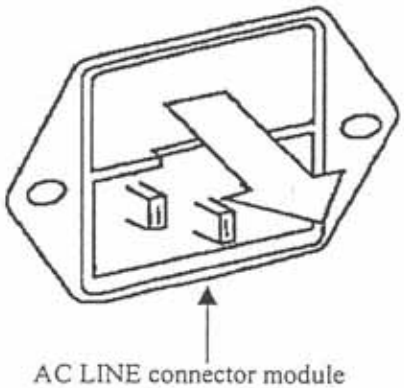

AC LINE connector module

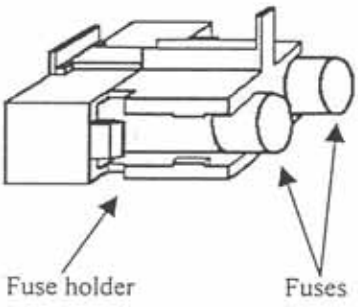

Fuse holder Fuses

The AQ4320 rear panel has the AC LINE connector module as shown. The power fuses are mounted in the fuse holder of the AC LINE connector module. Replace the blown fuses in the following steps.

(1) Turn the AQ4320 power switch OFF first, then unplug the power cord.

(2) Pull out the fuse holder.

(3) Replace two fuses simultaneously. If only one fuse blows, the other fuse is also damaged. You must replace both of them simultaneously.

(4) Push and mount the fuse holder securely, and plug the power cord into receptacle.

Fig. 2-2: Replacing the power fuses

Artisan Scientific - Quality Instrumentation ... Guaranteed | (888) 88-SOURCE | www.artisan-scientific.com

⚠ Warning

Before replacing the power fuses, turn the AQ4320 power switch OFF first, then unplug the power cord from the receptacle.

You may be shocked if the AQ4320 is powered.

After fuse replacement, check the system grounding and the AC power voltage. Then, turn the AQ4320 power switch ON. If not grounded, you may be shocked again.

If the AC source voltage is abnormal, the AQ4320 internal components may be damaged.

2.4.4 Exchange of built-in battery

Inquire of the nearest office or agency when a built-in battery is consumed.

Our company service man exchanges a built-in battery.

⚠ Note

When a built-in battery is consumed, the system of this container does not stand up.

Artisan Scientific - Quality Instrumentation ... Guaranteed | (888) 88-SOURCE | www.artisan-scientific.com

Chapter 3 PRECAUTIONS ON OPERATION

This chapter explains precautions on operation.

3.1 Operating Temperature Range

The guaranteed operating temperature range is +10 to +35℃.

3.2 Environmental Conditions

Since this system has a super-high-precision built-in light module, sufficient care is required for temperature, shock and vibration during storage or transportation.
The performance may not recover, in particular, once the following environmental conditions are exceeded.

Environmental conditions

(1) Storing temperature range: -10 to 50℃

(2) Vibration
Vibration equivalent to Frequency: 10Hz
Double amplitude: 2±0.5mm
Direction of vibration: Vertical, horizontal and back and forth
Vibrating time: 10min each (in each direction)

(3) Shock: Shock equivalent to the one applied to the system when one side of the bottom surface is naturally dropped from 25mm above a solid, wooden floor.

(4) Installation: The precision of the built-in light module deteriorates if the system has been installed in the vertical or opposite position for a long time.
Keep it in the horizontal position even during transportation and storage.

Artisan Scientific - Quality Instrumentation ... Guaranteed | (888) 88-SOURCE | www.artisan-scientific.com

3.3 Precautions on Handling

1) This system applies to laser class I .

2) Do not apply excessive shock to the system. Otherwise, the display unit, in particular, may break since it is made of glass although covered with plastic.

3) Do not leave the system under a hot or humid environment for a long time.

4) Do not allow an object which radiates strong radio wave or magnetic field near the system. Otherwise, it may malfunction.

5) Do not block the air hole on the side of the system. Otherwise, it may break due to abnormal temperature rise.

6) This system is equipped with a built-in fuse as a protection against over current. If this fuse is burnt out, remove the power supply cord and replace the AC voltage input socket fuse.

7) This system is equipped with a built-in temperature fuse as a protection against abnormal temperature rise. If the power supply cannot be turned on even after the measure in 6) above is taken, the temperature fuse may be burnt out. In this case, contact us.

8) Only service personnel is allowed to remove the system cover.

9) Please make this container the horizontal when transporting or setting up.

Artisan Scientific - Quality Instrumentation ... Guaranteed | (888) 88-SOURCE | www.artisan-scientific.com

3.4 Precautions for Using Optical Parts

Fully observe the following precautions since the stability of the system may deteriorate if the optical connector is damaged.

1) Do not use the system at a dusty place.

2) Connect an optical fiber free from a flaw on the edge to the system.

3) Before connecting an optical fiber, clean the edge to be connected to the optical connector of the system with alcohol, etc.

4) Before connecting an optical fiber to the system, check that the fiber edge is free from a flaw or dust using a microscope, etc. (in this case, check that no light is output from the fiber).

5) Do not connect an optical fiber to the system using a bare fiber adapter, etc.

6) Protect the system from dust or dirt by putting the cap on the connector when it is not in use.

⚠ Warning

The light output from the system is invisible since it is infrared. Pay enough attention during operation since your eyes may be damaged if you directly look at the output light.

⚠ Warning

Note that damage to your eye may increase if an optical equipment is used for this system.

Artisan Scientific - Quality Instrumentation ... Guaranteed | (888) 88-SOURCE | www.artisan-scientific.com

3.5 Precautions for Outputting Stable Light

This system may fail to output stable light after optical connector return loss is increased due to flaws or stains on the connector.
Be sure to follow the precautions below during operation.

1. Connect an optical connector of ultra-PC or higher (return loss of 50dB min.) to this system.

2. Before connecting an optical connector to the system, check that the edge is free from a flaw or a stain using a microscope, etc.

⚠ Caution

Before observing the optical connector edge using a microscope, etc., check that no light is output from it.

3. Clean the optical connector as follows:
(1) Slightly wipe it with a cleaning paper (which does not produce fiber powder) wet with alcohol.
(2) Wipe it again with a dry cleaning paper.
(3) If you have optical fiber edge cleaning equipment, use it to clean the connector again.

4. The optical connector edge may be damaged after the connector has been plugged in and out repeatedly. In order to prevent it, it is recommended to connect a short optical fiber to the system and the open edge of the fiber to an object to be measured using a connector adapter (J/J), etc.
In this case, using an APC (angled PC) optical connector for the object enables more stable measurement.

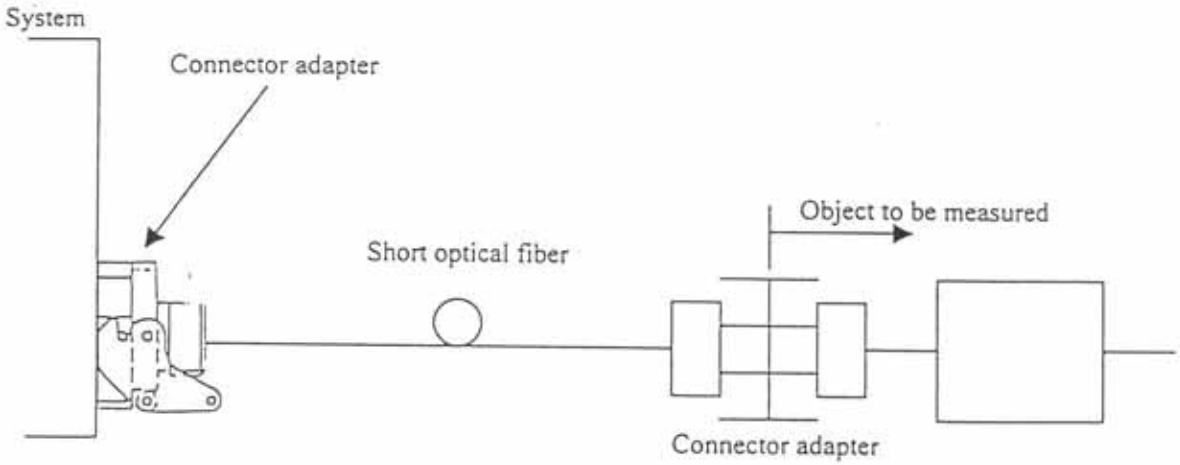

Artisan Scientific - Quality Instrumentation ... Guaranteed | (888) 88-SOURCE | www.artisan-scientific.com

5. Avoid using it at a dusty place.

6. Do not connect an optical fiber to the system using a bare fiber adapter, or the connector may be damaged.

7. Protect the system from dust or dirt by putting the cap on the connector when it is not in use.

Artisan Scientific - Quality Instrumentation ... Guaranteed | (888) 88-SOURCE | www.artisan-scientific.com

Chapter 4 FUNCTION

This chapter explains the functions of the operation and display units.

4.1 Operation Unit

Fig. 4-1 shows the operation unit arrangement and Table 4-1 shows the names and functions corresponding to the numbers in the figure.

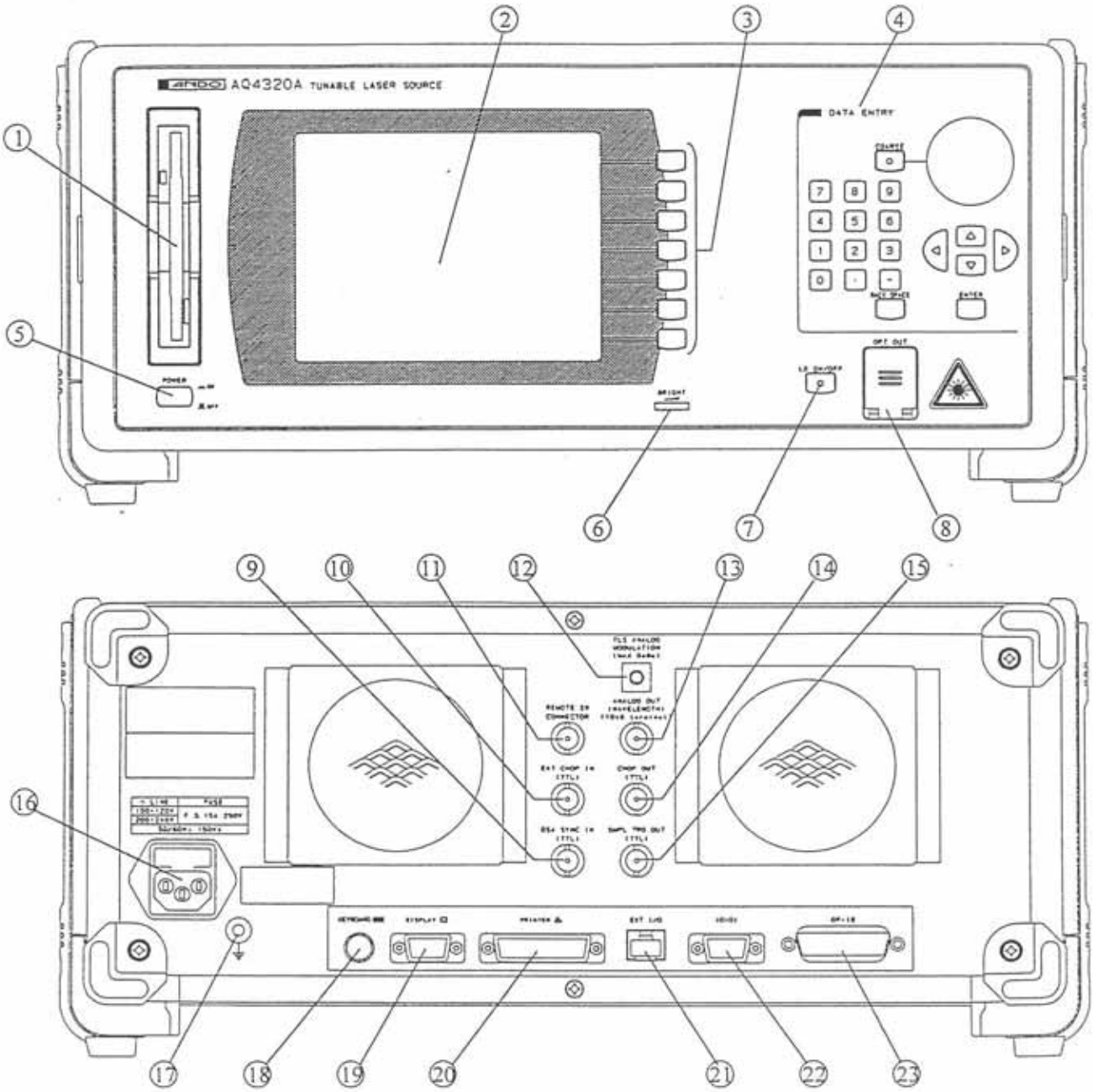

Fig. 4-1: Operation unit arrangement

Artisan Scientific - Quality Instrumentation ... Guaranteed | (888) 88-SOURCE | www.artisan-scientific.com

Table 4-1: Operation unit name and function (1/2)

No.	Name	Indication on system	Function
①	Floppy disk drive (FDD)		Used for saving and reading the program files (refer to 5.4.6).
②	Liquid crystal display (LCD)		Displays the light emitting wavelength and conditions of the light source.
③	Software key switch		Used for setting the light emitting conditions (e.g. wavelength and light power level).
④	[DATA ENTRY] section	DATA ENTRY	Used for entering light emitting condition parameters for the light source. For details, refer to 5.4.
⑤	Power supply switch	POWER	Power supply switch for turning the power to "ON" and "OFF".
⑥	Bright	BRIGHT	Encoder for adjusting the LCD brightness. Turn it right to increase the brightness or left to decrease the brightness.
⑦	Light source ON/OFF switch	LD ON/OFF	Switch for turning the light power on and off.
⑧	Light connector	OPT OUT	Light power unit of the system.
⑨	OSA SYNC IN connector	OSA SYNC IN	Connector to AQ6317 (Optical spectrum analyzer) for synchronized sweeping input. Connects with the terminal EXT TRG IN of AQ6317 by the coaxial cable. (refer to the instruction manual for AQ6317 for detail).
⑩	EXT CHOP IN connector	EXT CHOP IN	Connector for inputting the CHOP signal synchronized with the output light from an external source.
⑪	REMOTE SW connector	REMOTE SW CONNECTOR	Connector for turning the light power off. For operation, connect an external switch to it. It is a connector for emergency shutdown An 50-ohm terminal is mounted on this connector when delivered.
⑫	TLS ANALOG MODULATION connector	TLS ANALOG MODULATION	Input connector for fine-modulating the light source.
⑬	ANALOG OUT (WAVELENGTH) connector	ANALOG OUT (WAVELENGTH)	Connector for outputting electric signals proportional to the wavelength. Output is approximately 0 to 2V in the range between the sweeping start wavelength (light frequency) and the sweeping stop wavelength (light frequency).
⑭	CHOP OUT connector	CHOP OUT	Connector for outputting the CHOP signal synchronized with the output light.
⑮	SMPL TRG OUT connector	SMPL TRG OUT	Output connector for synchronizing with AQ6317 and sweeping. Connects with the terminal TLS SYNC OUT of AQ6317 by the coaxial cable. (refer to the instruction manual for AQ6317 for detail).
⑯	Power supply plug socket		Socket with a built-in fuse for inserting the power supply plug.
⑰	Ground terminal	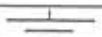	Terminal for grounding.

Artisan Scientific - Quality Instrumentation ... Guaranteed | (888) 88-SOURCE | www.artisan-scientific.com

Table 4-1: Operation unit name and function (2/2)

<table>
<tr><th>No.</th><th>Name</th><th>Indication on system</th><th>Function</th></tr>
<tr><td>⑱</td><td>KEYBOARD connector</td><td>KEYBOARD</td><td>Connector for the keyboard.
IBM-compatible keyboard can be used.</td></tr>
<tr><td>⑲</td><td>DISPLAY connector</td><td>DISPLAY</td><td>Connector for the external display.
VGA color display capable of displaying in 16 colors can be used.</td></tr>
<tr><td>⑳</td><td>Printer connector</td><td>PRINTER</td><td>Connector for the printer.
<table><tr><th>Manufacturer</th><th>code type</th></tr><tr><td>NEC</td><td>PC−PR201</td></tr><tr><td>EPSON</td><td>ESC/P</td></tr><tr><td>CANON</td><td>LIPSII</td></tr><tr><td>(POSTSCRIPT)</td><td>POSTSCRIPT</td></tr></table></td></tr>
<tr><td>㉑</td><td>Extension connector</td><td>EXT I/O</td><td>It is a connector which connects this container. with an external equipment for AQ4320.
It is not compatible for AQ2140 (optical power meter).</td></tr>
<tr><td>㉒</td><td>RS-232C connector</td><td>I0I0I</td><td>Connector for the RS-232C (15 poles) interface.
Use an RS-232C cross cable.</td></tr>
<tr><td>㉓</td><td>GP-IB connector</td><td>GP-IB</td><td>Connector for the GP-IB interface.</td></tr>
</table>

Artisan Scientific - Quality Instrumentation ... Guaranteed | (888) 88-SOURCE | www.artisan-scientific.com

4.2 Display Screen (LCD)

4.2.1 Main Screen

Fig. 4-2 shows the status where all LCDs come on and Table 4-2 shows the contents of the display.

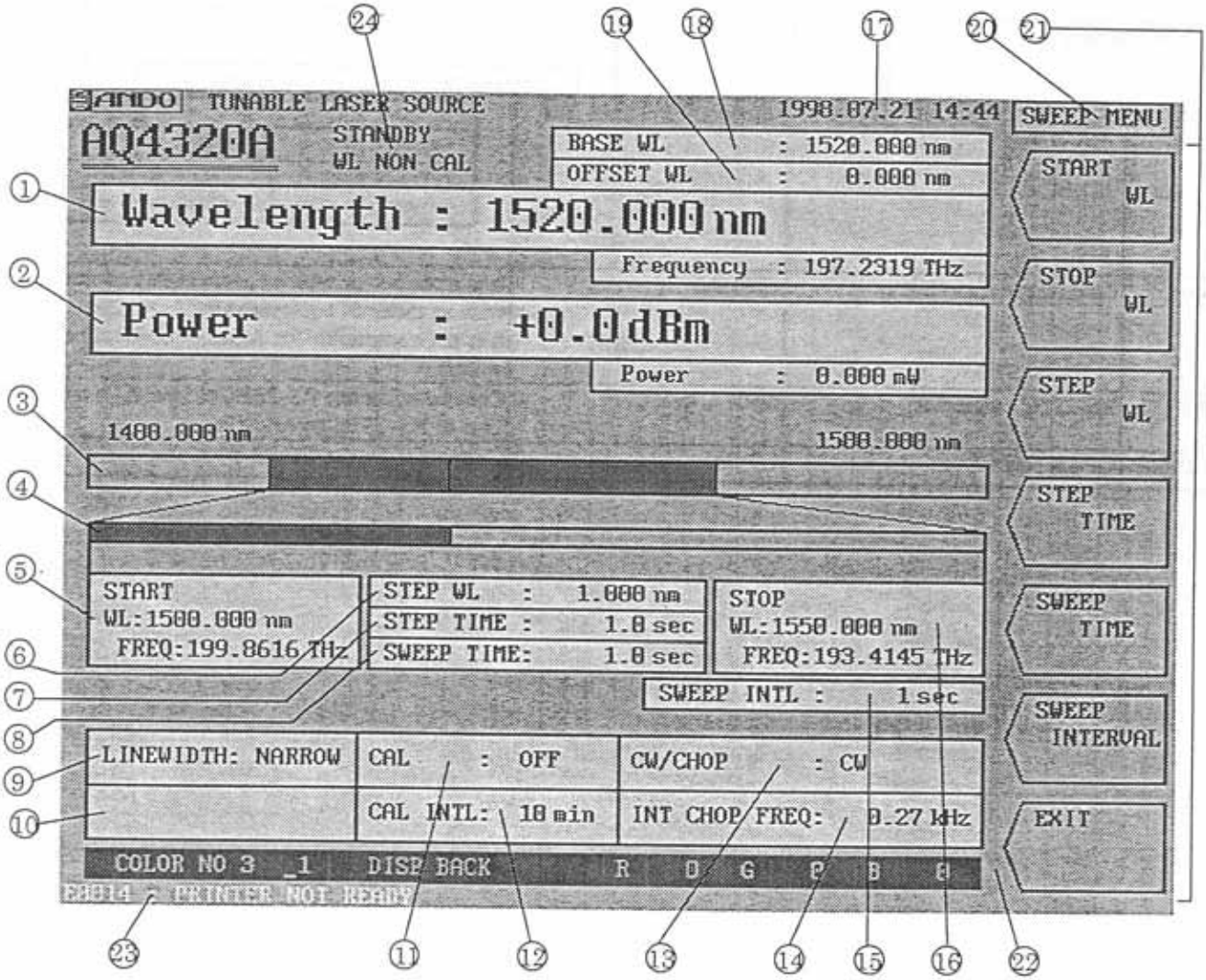

Fig. 4-2: Main screen status where all LCDs come on

Artisan Scientific - Quality Instrumentation ... Guaranteed | (888) 88-SOURCE | www.artisan-scientific.com

Table 4-2: Contents of main screen display (1/2)

No.	Name	Indication on system	Contents
①	Light emitting Wavelength /frequency	Wavelength	Displays the wavelength/light frequency for emitting light.
②	Light power level	Power	Displays the light power level setting.
③	Sweeping wavelength /light frequency range		Displays the sweeping range 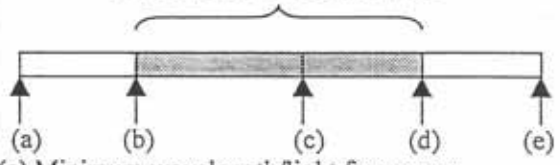 (a) Minimum wavelength/light frequency (b) Sweep start wavelength/light frequency (c) Setting or present luminescence wavelength /light frequency (d) Sweep stop wavelength/light frequency (e)Maximum wavelength/light frequency
④	Enhanced figure of sweeping wavelength /light frequency range		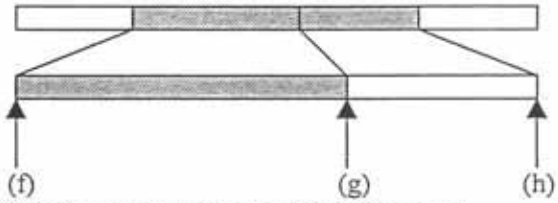 (f) Sweep start wavelength/light frequency (g)Current light emitting wavelength /light frequency (h)Sweep stop wavelength/light frequency
⑤	Sweep start wavelength /light frequency	START WL FREQ	Displays the sweep start wavelength/light frequency setting.
⑥	Step wavelength /light frequency	STEP WL or STEP FREQ	Displays the wavelength/light frequency setting for each step during step sweep.
⑦	Step time	STEP TIME	Displays the time setting for each step during step sweep.
⑧	Sweep time	SWEEP TIME	Displays the time setting for each step during the wavelength is continuously changed.
⑨	Linewidth	LINEWIDTH	Displays the linewidth setting.
⑩	Remote information		Displays the GP-IB command format (ANDO, CFORM1 or CFORM2).
⑪	Calibration	CAL	Displays whether the wavelength is calibrated at a regular interval (ON) or not (OFF).
⑫	Calibration interval	CAL INTL	Displays the wavelength calibration interval setting.
⑬	Light power mode	CW/CHOP	Displays the light power mode (CW, INT CHOP or EXT CHOP).
⑭	Internal CHOP frequency	INT CHOP FREQ	Displays the CHOP frequency setting to be modulated inside the system.
⑮	Sweeping interval	SWEEP INTL	Displays the sweeping interval setting during repeated sweep.

Artisan Scientific - Quality Instrumentation ... Guaranteed | (888) 88-SOURCE | www.artisan-scientific.com

Table 4-2: Contents of main screen display (2/2)

No.	Name	Indication on system	Contents
⑯	Sweep stop wavelength /light frequency	STOP WL FREQ	Displays the sweep stop wavelength /light frequency.
⑰	Year, month, day and time	YMD, MDY or DMY and time	Displays year, month, day and time.
⑱	Base wavelength /light frequency	BASE WL or BASE FREQ	Displays the base wavelength/light frequency.
⑲	Offset wavelength /light frequency	OFFSET WL or OFFSET FREQ	Displays the offset wavelength/light frequency.
⑳	Software key hierarchy		Displays the currently displayed software hierarchy.
㉑	Software key		Displays the software key menus.
㉒	Screen color		Displays the screen color settings. For the items to be set, refer to 4.2.2.
㉓	Error message		Displays error messages.
㉔	System status	STANDBY WL NON CAL	Displays the system status.

Artisan Scientific - Quality Instrumentation ... Guaranteed | (888) 88-SOURCE | www.artisan-scientific.com

4.2.2 LCD Setting Screen

This section explains the items to be set relating to the screen color and their contents.

Select <SYSTEM>, <MISC> and <COLOR> in this order on the software menu. Then press the <LOAD COLOR> key to enter the load number (numeric values) and press the [ENTER] key to display the columns for entering the screen color settings ((a) to (f) in Fig. 4-3) on the lowest part of the LCD screen. Table 4-3 shows the items to be set and their contents.

Screen color can be changed by changing the values of R, G and B.

Change the screen color to Table 4-4 to confirm each described adjustment item on the screen clearly.

To save the changed color, select <SAVE COLOR>. To cancel the changed color, select <CANCEL>.

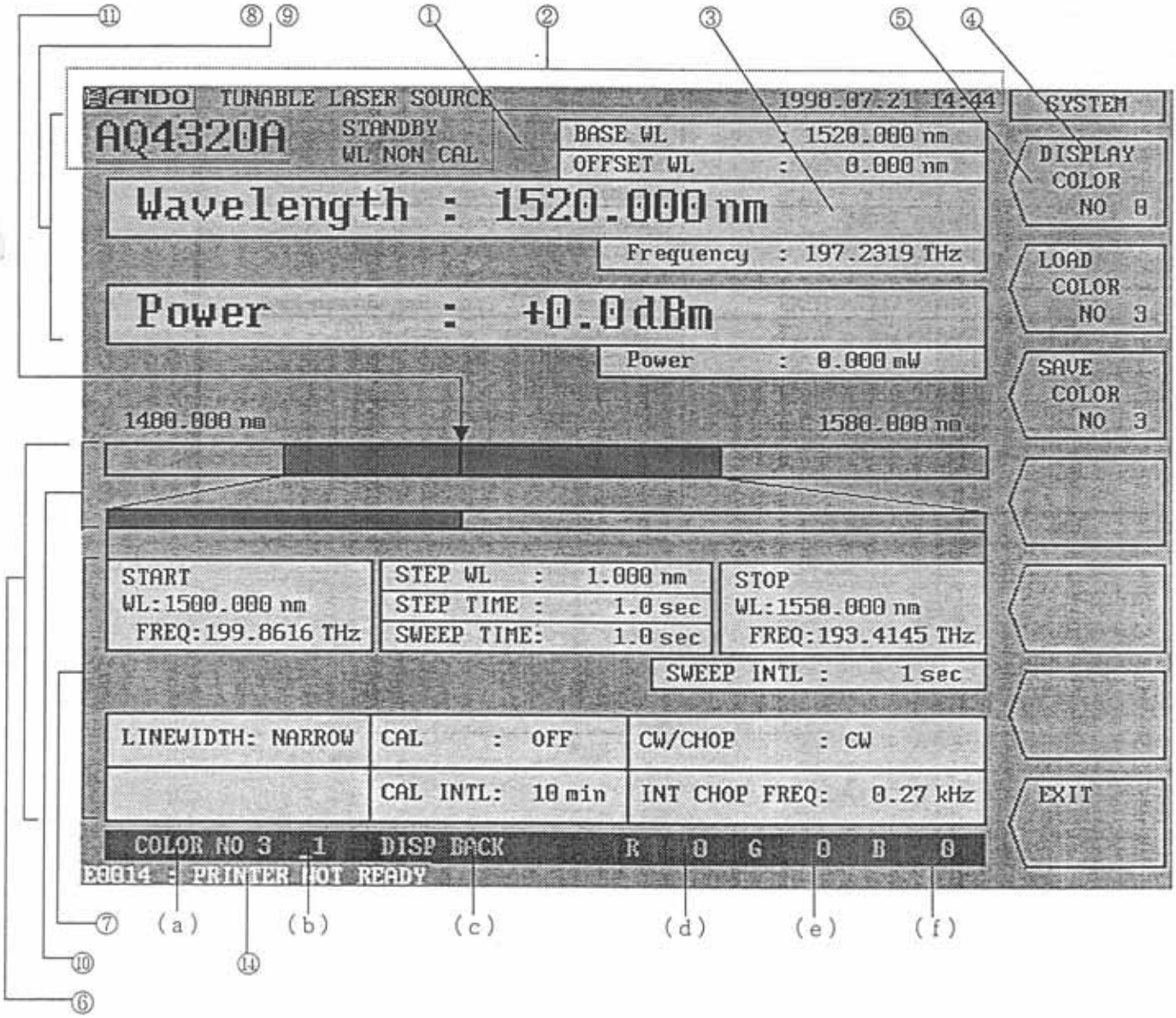

Fig. 4-3: LCD screen color setting screen

Artisan Scientific - Quality Instrumentation ... Guaranteed | (888) 88-SOURCE | www.artisan-scientific.com

Table 4-3: Setting and contents of LCD screen color

No.	Item	Contents
(a)	Pattern No.	Displays the screen color pattern No. The number is set in the range of 0 to 9.
(b)	Adjusting item No.	Displays the adjusting item No. For details, refer to Table 4-4.
(c)	Adjusting item	Displays the adjusting item. For details, refer to Table 4-4.
(d)	Red (R)	Displays the density of red (R). (in the range 0 to 63).
(e)	Green (G)	Displays the density of green (G). (in the range 0 to 63).
(f)	Blue (B)	Displays the density of blue (B). (in the range 0 to 63).

Table 4-4: Screen color adjusting item

Adjusting item No.	Adjusting item	Adjusting position (Nos. in Fig. 4-3)
①	DISP BACK	①Background of screen.
②	TITLE TEXT	②Screen title and date.
③	DATA FRAME	③Frame of each item, software key display, etc.
④	FUNCTION TEXT	Characters in software key ④.
⑤	FUNCTION BACK	Background of software key ⑤.
⑥	DATA TEXT	Characters in ⑥ (excluding software key).
⑦	DATA BACK	Background within the range of ⑦. (excluding software key).
⑧	MAIN DATA TEXT	Characters in ⑧ (excluding software key).
⑨	MAIN DATA BACK	Background within the range of ⑨. (excluding software key).
⑩	MAIN SWEEP BAR	Sweep bar in ⑩.
⑪	WAVE MARKER	⑪Wavelength marker.
⑫	INPUT DATA TEXT	Characters in the selected range on all screens.
⑬	INPUT DATA BACK	Inside the frame in the selected range on all . background.
⑭	SYSTEM ERROR	⑭Characters of error indication.

Artisan Scientific - Quality Instrumentation ... Guaranteed | (888) 88-SOURCE | www.artisan-scientific.com

4.3 Keyboard operation

The AQ4320 has the standard KEYBOARD connector to the back. When you attach a IBM-compatible keyboard, you can set up and modify each AQ4320 parameter and send and receive data.

⚠Caution

Always turn OFF the POWER switch (" ■ OFF") before connecting or disconnecting the Keyboard cable to/from the AQ4320.

Table 4-5 shows the correspondence table of the AQ4320 operation part and the keyboard operation.

Table 4-5 :Correspondence table of AQ4320 operation part and keyboard operation

Name	Indication on system	Correspondence key for keyboard operation
Softkey switch	Softkey1 Softkey2 Softkey3 Softkey4 Softkey5 Softkey6 Softkey7	[F1] [F2] [F3] [F4] [F5] [F6] [F7]
Light source ON/OFF switch	LD ON/OFF	[Ctrl]+[F2]
[DATA ENTRY] section	DATA ENTRY	
COARSE key	COARSE	[Alt]
Ten-key (numeric key)	0 1 2 3 4 5 6 7 8 9 . -	[0] [1] [2] [3] [4] [5] [6] [7] [8] [9] [.] [-]
BACK SPACE key	BACK SPACE	[BACK SPACE]
Rotary encoder (increased by clockwise) (decreased by counterclockwise)		 [Page Up] [Page Down]
Cursor key		[↑][↓][←][→]
ENTER key	ENTER	[ENTER]

* The input of the alphabet can be input from the keyboard operation.
* The input of the sign can be input from the keyboard operation.

Artisan Scientific - Quality Instrumentation ... Guaranteed | (888) 88-SOURCE | www.artisan-scientific.com

Chapter 5 OPERATION

This chapter explains how to use this system and its various units.

5.1 Before Operation

1) Check that the [POWER] switch is set at [■ OFF].

2) Check that the fuse in the power supply plug socket has the specified capacity.

3) Check that the power supply voltage is applicable to the input voltage of this system.

4) Connect the power supply cord of the attachment to the specified commercial power supply of this system. If the commercial power supply socket is the 2-polar type, use the attached adapter and ground the earth terminal.

5) Check that the operating environment is applicable to this system.
Do not use the system at a dusty place.

6) Set up this system horizontally in a place which is steady and flat site. During installation, check that the air holes are not blocked (especially for the air holes on the side and rear surfaces, clearances of 15 cm or more shall be obtained between the hole and the wall.

7) Connection with other equipment
Before connecting the external controller, keyboard, signal generator, etc. to this system, be sure to turn the power supply off.
Otherwise, the system may break.

Note

After the power supply is turned on, this container can usually be measured in about 30 minutes. Before performing high-accuracy measurement, perform 3-hour heating-up operation after powering-on.

Artisan Scientific - Quality Instrumentation ... Guaranteed | (888) 88-SOURCE | www.artisan-scientific.com

5.1.1 Opening and Closing of Connector Protection Cap

The system is equipped with a connector protection cap in order to protect the light output part from dust or dirt. Be sure to close this cap when the system is not in used.
Fig. 5-1 shows how to open and close the cap.

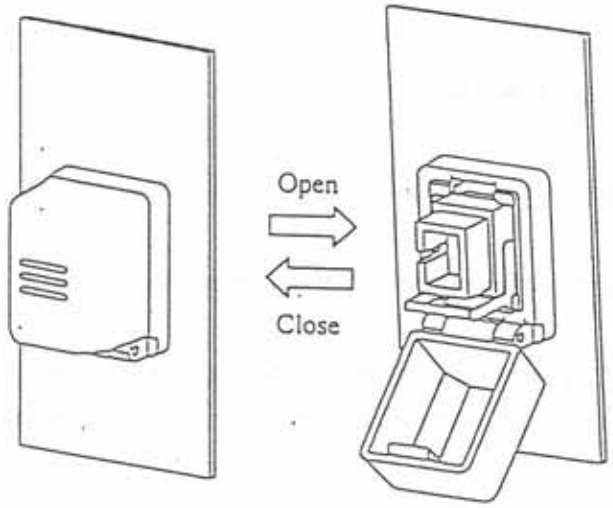

Fig. 5-1: How to open/close connector protection cap

5.1.2 Connecting and Removing of Connector Adapter

The connector adapter can be connected simply by lowering the lock lever after inserting the adapter to the light output part.
In order to remove it, raise the lever to release the lock (refer to Fig. 5-2).

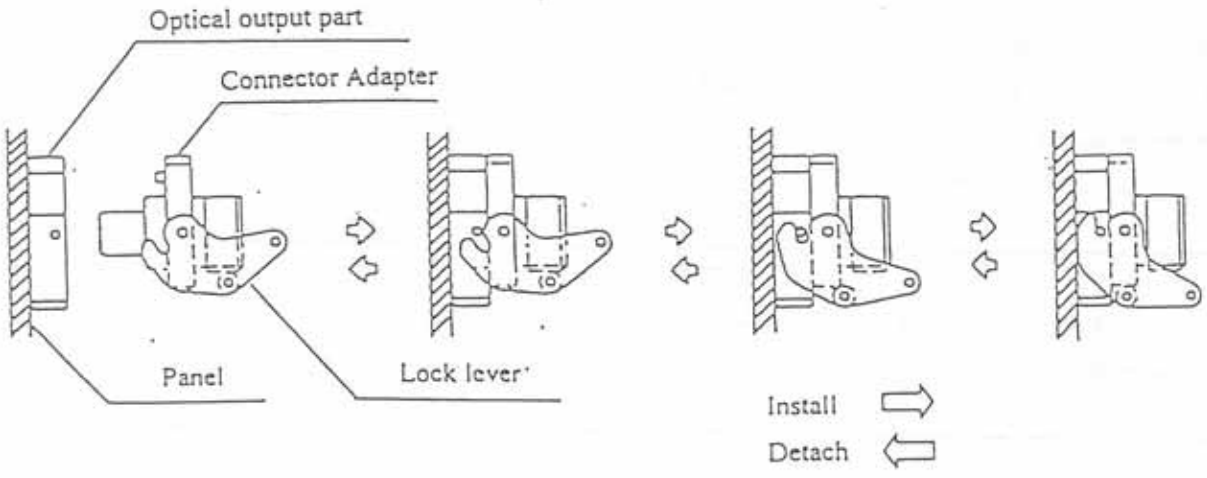

Fig. 5-2: How to connect/remove connector adapter

Artisan Scientific - Quality Instrumentation ... Guaranteed | (888) 88-SOURCE | www.artisan-scientific.com

5.1.3 Cleaning of Light Output Part

Before connecting an optical connector (e.g. optical fiber cord) to the connector adapter, be sure to clean the connector connection and light output part. Otherwise, the connector and the optical parts of the system may be damaged by dust or dirt.

1) Cleaning of connector adapter connection

When cleaning the connector adapter connection, it is recommended to use "CreTop Stick Type"of NTT International.

Fig. 5-3 shows how to clean the connection.

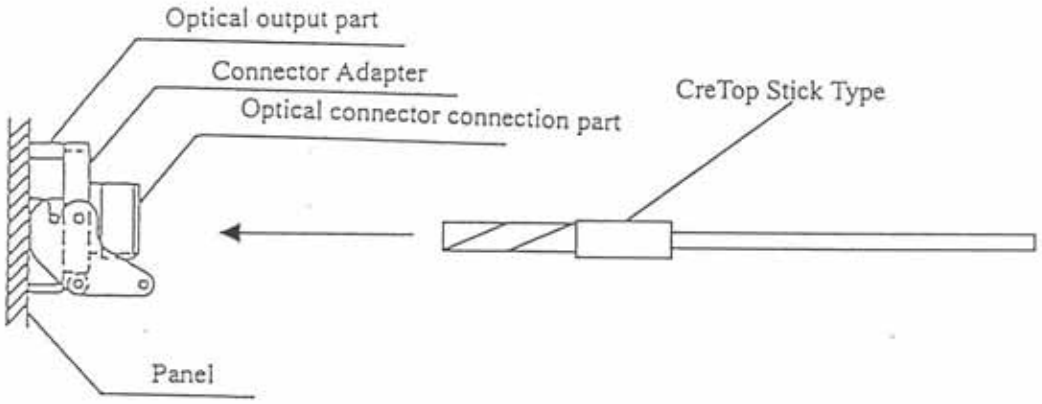

Fig. 5-3: How to clean optical connector connection

2) Cleaning of light output part

After removing the connector adapter, clean the light output part ferrule using a cotton on a stick slightly wet with absolute alcohol. Always use a new cotton (see Fig. 5-4).

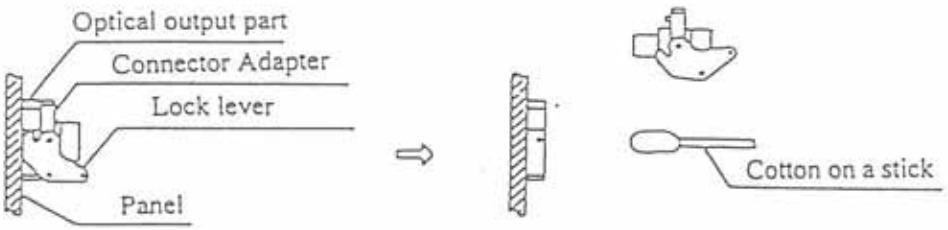

Fig. 5-4: How to clean light output part

Artisan Scientific - Quality Instrumentation ... Guaranteed | (888) 88-SOURCE | www.artisan-scientific.com

3) Cleaning of optical connector to be connected

Wipe off stains on the optical fiber connector ferrule and edge to be connected using a cleaning paper slightly wet with absolute alcohol (always use a new cleaning paper).

Note

Since stains may remain after cleaning using absolute alcohol depending on wiping methods, it is recommended to check the connector edge using a microscope, etc.

Artisan Scientific - Quality Instrumentation ... Guaranteed | (888) 88-SOURCE | www.artisan-scientific.com

5.2 Turning on and Checking

After checking the power supply and connection by referring to 5.1, turn this system on as follows:

1) Turn the [POWER] switch to [▬ ON].

2) Since the control software inside this system is designed using MS-DOS, call the MS-DOS start-up screen first and then initialize the system. The password entry screen as shown in Fig. 5-5 is automatically displayed if no error is detected. If an error occurs during initialization, an error message appears, stopping operation. Refer to 5.5 for error messages and take appropriate actions. The password must be of 4 numerical characters (3 or less numerical characters are not acceptable). The factory setting of the password is "4320". Re-register a new password by referring to the item 2-4 in 5.4.7. On the password entry screen, the version number of AQ4320, serial number, system clock and current status are displayed.

VERSION NO. HOST: 0A.**.**.** (AQ4320A)
SUB : 0A.**.**.** (AQ4320A)
LD : 0A.**.**.** (AQ4320A)
0B.**.**.** (AQ4320B)
0D.**.**.** (AQ4320D)
Indicates software version.

SERIAL NO.: ********
Indicates serial number.

SYSTEM CLOCK: ****.**.**.**:**
Indicate year, month, day and time.

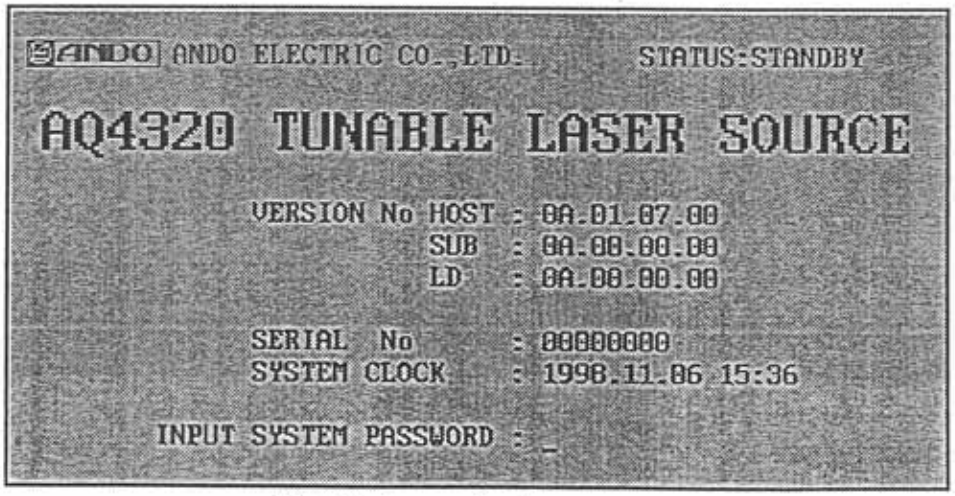

Fig. 5-5: Password entry screen

Artisan Scientific - Quality Instrumentation ... Guaranteed | (888) 88-SOURCE | www.artisan-scientific.com

3) STATUS indicates the current status of the system.

NORMAL: Heating-up operation has been completed and the system is ready for normal operation. The state confirmation on the start-up screen is necessary.

STANDBY: Heating-up operation is being performed.

Even when the system is in STANDBY status, the password can be accepted and the system can be operated. However, in this case, the system specifications may not be satisfied completely.

If the system is operated while in STANDBY status, calibrate the wavelength after the system is brought in NORMAL status. The state of NORMAL is in the state, that display (STAUS:STANDBY) of upper right at the display of Figure 5-5 changes into NORMAL.

It is a state that display (STANDBY) on the left at the display of Figure 5-6 goes out.

The wavelength is automatically proofread when entering the state of NORMAL in no sweep of the wavelength it while remotely controlling if software key < AUTO CAL ON/OFF >(5-33 references) is set in turning on.

4) Unless a wrong password is entered, wavelength is automatically calibrated (when POWER ON CAL is set at ON), and the initial screen shown in Fig. 5-6 will be displayed.

The values on the actual initial screen may differ from the ones shown in Fig. 5-6.

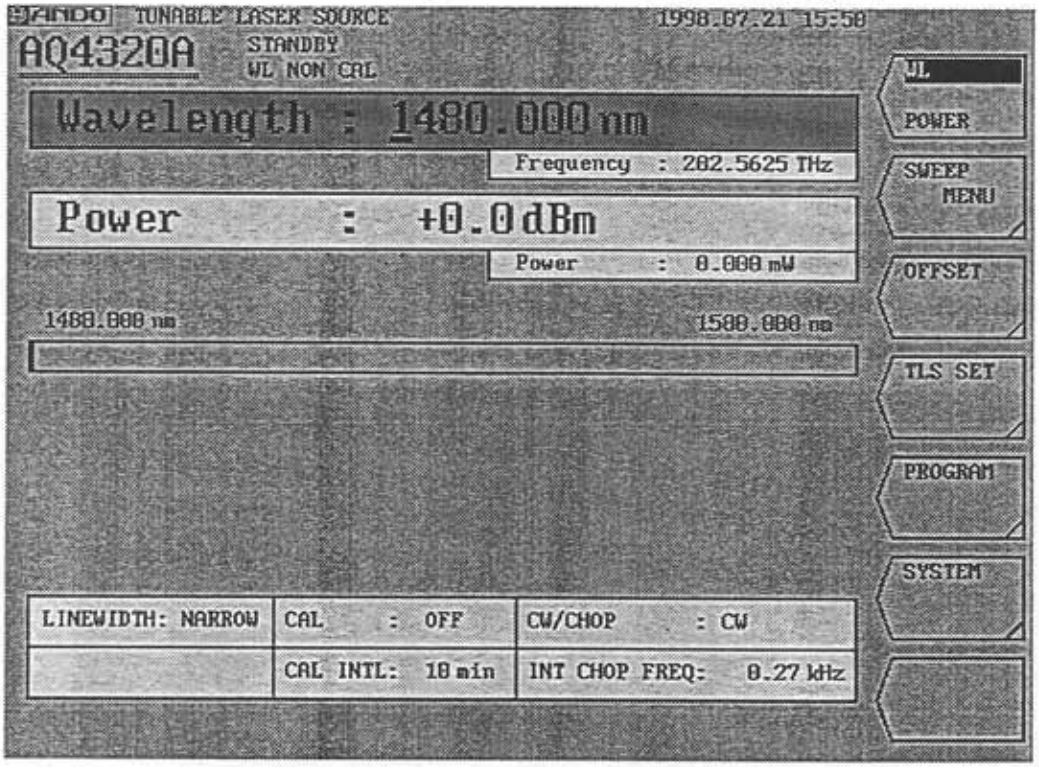

Fig. 5-6: Initial screen

5.3 Turning off

Turn the [POWER] switch to [■ OFF].

Artisan Scientific - Quality Instrumentation ... Guaranteed | (888) 88-SOURCE | www.artisan-scientific.com

5.4 How to Operate

This section explains how to operate this system.

5.4.1 Common Operating Method

(1) How to input parameter

a) Pressing the software key when entering a parameter changes the color of the part displaying the numeric value to be entered on the screen. This color can be changed. Refer to 4.2.2 for how to change it.

b) Parameters can be entered in three ways, namely using numeric keys, the rotary encoder and the cursor keys.

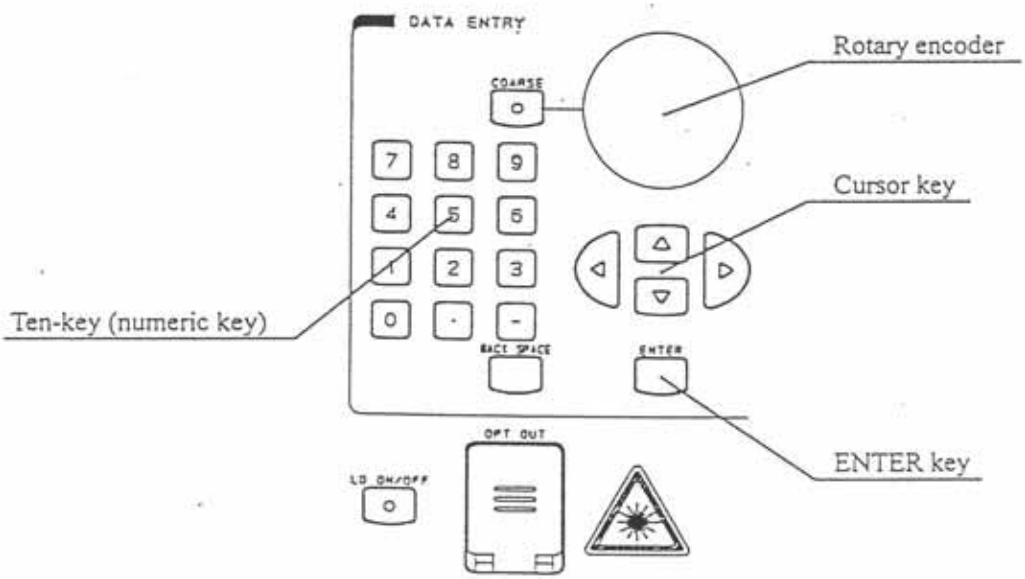

The digit of the parameter to be entered can also be selected by pressing the [←] or [→] key in addition to using numeric keys, the rotary encoder or the cursor keys. The selected digit can be moved to left by pressing the [←] key or right by the [→] key.

When the parameter is input with numeric keys, the software key on the lowest portion turns to <CANCEL>.

Pressing this <CANCEL> key cancels the entry.

Artisan Scientific - Quality Instrumentation ... Guaranteed | (888) 88-SOURCE | www.artisan-scientific.com

c) Using numeric keys

Numeric values can be entered by inputting them using numeric keys and pressing the [ENTER] key. If you press a wrong numeric key, the entered value can be cleared by pressing the [BACK SPACE] key.

If the decimal places of the parameter to be entered are omitted, "0" is automatically entered there.

d) Using rotary encoder

Numeric values can be increased by turning the rotary encoder clockwise or decreased by turning it counterclockwise.

During the [COARSE] key is turned on (the lamp lights up), the step for increasing or decreasing numeric values becomes wider. The [COARSE] key does not function when the <CONFIG> key is used for setting.

e) Using cursor key

Pressing the [↑] key functions in the same way as when turning the rotary encoder clockwise and pressing the [↓] key as when turning it counterclockwise.

(2) The software key menu is hierarchically structured and pressing the software key shaped  proceeds to the next hierarchy, displaying the related software key menus. In order to return to the previous hierarchy, press the <EXIT> key on the lowest part of the menu.

Artisan Scientific - Quality Instrumentation ... Guaranteed | (888) 88-SOURCE | www.artisan-scientific.com

5.4.2 Software Key Main Menu

The software keys on the initial screen are displayed as shown below after turning this system on. The numbers on the right of the keys (e.g. 1-1 and 1-2) indicate the sections where description on each key is provided.

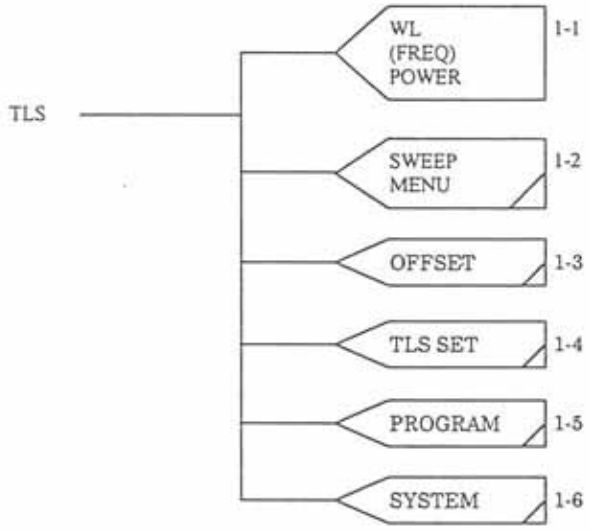

Artisan Scientific - Quality Instrumentation ... Guaranteed | (888) 88-SOURCE | www.artisan-scientific.com

1-1 <WL/FREQ/POWER> key

This key is used for setting the light emitting wavelength (or light frequency) and the light power. The object to be set is switched alternatively between the wavelength or the light frequency (WL or FREQ) and the light power (POWER) every time the software key is pressed, highlighting the selected key characters.

Please refer to the wavelength/the optical frequency range setting and the optical output range setting in Table 5-1 for details of a set item.

1-2 <SWEEP MENU> key

This key is used for opening the SWEEP MENU mode menu (see 5.4.3).

The menu is used for starting and stopping sweeping the wavelength/light frequency and setting the sweeping conditions.

1-3 <OFFSET> key

This key is used for opening the OFFSET mode menu (see 5.4.4).

The menu is used for setting the light emitting wavelength (light frequency) using the offset amount of the base wavelengths (light frequencies).

1-4 <TLS SET> key

This key is used for opening the TLS SET mode menu (see 5.4.5).

The menu is used for setting the light power mode for CW, CHOP, etc., the screen display unit and so forth.

1-5 <PROGRAM> key

This key is used for opening the PROGRAM mode menu (see 5.4.6).

The menu is used for programming light emitting conditions and sweeping procedures. The program shall be stored in the built-in hard disk of the system and also can be stored in the built-in floppy disk.

1-6 <SYSTEM> key

This key is used for opening the SYSTEM mode menu (see 5.4.7).

The menu is used for setting the screen display, printer, remote equipment and wavelength calibration conditions as well as the password. It also enables the wavelength to be calibrated.

Artisan Scientific - Quality Instrumentation ... Guaranteed | (888) 88-SOURCE | www.artisan-scientific.com

5.4.3 SWEEP MENU

This menu is used for starting and stopping sweeping the wavelength/light frequency and setting the sweeping conditions.

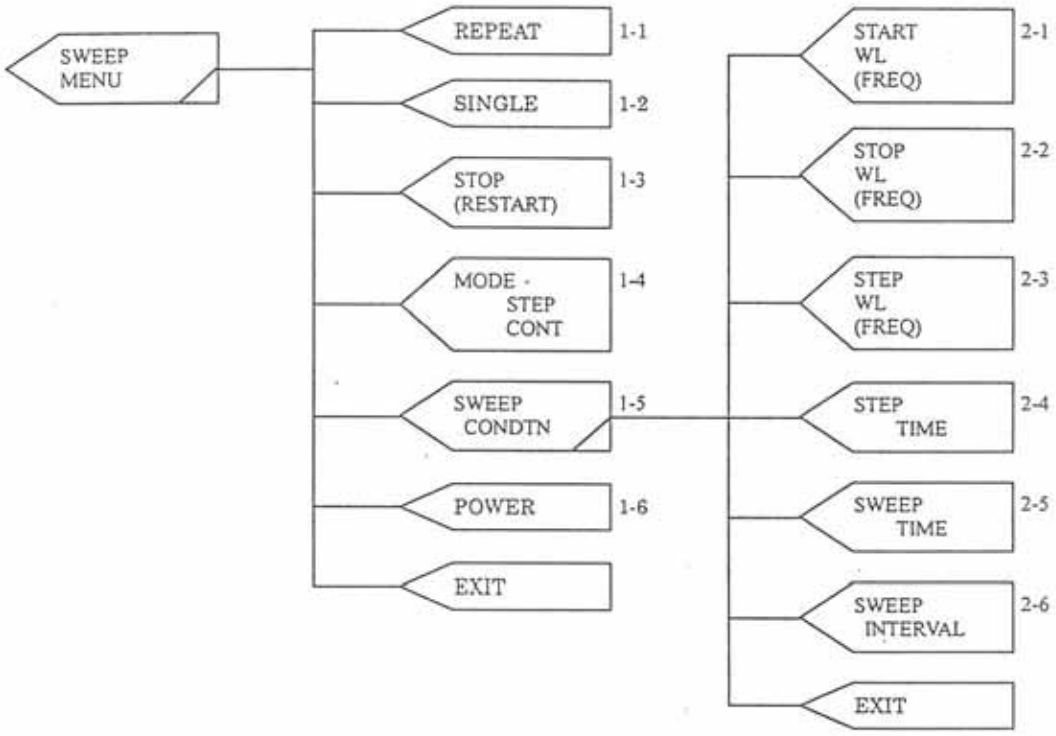

Artisan Scientific - Quality Instrumentation ... Guaranteed | (888) 88-SOURCE | www.artisan-scientific.com

1-1 <REPEAT> key

This key is used for repeatedly sweeping the wavelength.

During sweeping the wavelength, only the <SINGLE> key and <STOP> key is enabled and all other keys disabled.

1-2 <SINGLE> key

This key is used for sweeping the wavelength once.

After starting sweeping the wavelength, only the <STOP> key is enabled until the sweeping is completed and all other keys are disabled.

All keys become enabled by stopping the sweeping using the <STOP> key.

1-3 <STOP> key

This key is used for stopping sweeping the wavelength or re-sweeping.

Pressing the key during sweeping stops the wavelength sweeping and display RESTART, and pressing it while RESTART is being displayed restarts sweeping from where it has been stopped.

1-4 <MODE> key

This key is used for setting the wavelength sweeping mode.

STEP and CONT are switched every time it is pressed.

STEP mode: Sweeps the wavelength (or light frequency) from the short wavelength (high frequency) side to the long wavelength (low frequency) side at the interval of the set wavelength (or frequency) in the set wavelength/light frequency range.

For setting the wavelength/light frequency range, refer to "2-1 <START WL/FREQ> key" and "2-2 <STOP WL/FREQ> key".

For setting the wavelength/light frequency interval, refer to "2-3 <STEP WL/FREQ> key".

CONT mode: Continuously sweeps the wavelength in the set wavelength/light frequency range for the set sweeping time. For setting the sweeping time, refer to "2-5 <SWEEP TIME> key".

TRIG mode: TRIG mode is also available as wavelength sweeping mode. However, since it is a mode only for remote control, it cannot be set manually. Please refer to GP-IB command (TSWM*,TRIG) in Table 6-3.

1-5 <SWEEP CONDTN> key

This key is used for opening the menu for setting each wavelength (or light frequency) parameter (see 2-1 to 2-6).

Artisan Scientific - Quality Instrumentation ... Guaranteed | (888) 88-SOURCE | www.artisan-scientific.com

1-6 < POWER > key

The value of an optical output is set.

A similar operation to 5.4.2 main menu optical output (POWER) of 1-1< WL/FREQ/POWER > key can be done.

Refer to the optical output range setting in Table 5-1 for details of a set item.

****

2-1 <START WL/FREQ> key

This key is used for setting the wavelength (light frequency) for starting sweeping the wavelength (light frequency).

Please refer to the starting sweeping the wavelength/the Starting sweeping the optical frequency range setting in Table 5-1 for details of a set item.

2-2 <STOP WL/FREQ> key

This key is used for setting the wavelength (light frequency) for stopping sweeping the wavelength (light frequency).

Please refer to the stopping sweeping the wavelength/the stopping sweeping the optical frequency range setting in Table 5-1 for details of a set item.

2-3 <STEP WL/FREQ> key

This key is used for setting the interval for sweeping the wavelength/light frequency.

Please refer to the interval for sweeping the wavelength/interval for sweeping the optical frequency setting in Table 5-1 setting for details of a set item.

2-4 <STEP TIME> key

This key is used for setting the step time in the STEP mode (see 1-4).

Please refer to the step time of Table 5-1 setting for details of a set item.

2-5 <SWEEP TIME> key

This key is used for setting the sweeping time in the CONT mode (see 1-4).

Please refer to the sweeping time of Table 5-1 setting for details of a set item.

2-6 <SWEEP INTERVAL> key

This key is used for setting the sweep stop time for each wavelength sweeping operation.

Please refer to sweep stop time setting in Table 5-1 for details of a set item.

Artisan Scientific - Quality Instrumentation ... Guaranteed | (888) 88-SOURCE | www.artisan-scientific.com

5.4.4 OFFSET

This menu is used for setting the light emitting wavelength (light frequency) using the offset amount of the base wavelengths (light frequencies).

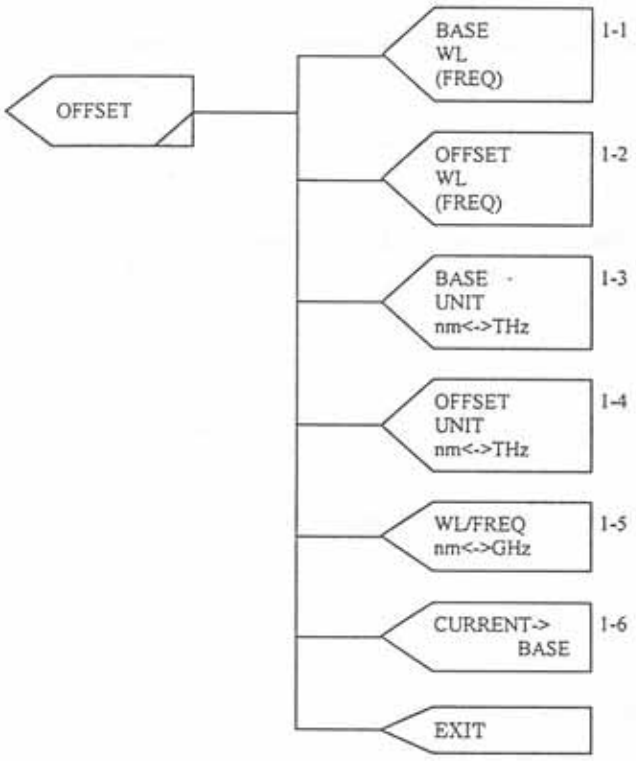

Artisan Scientific - Quality Instrumentation ... Guaranteed | (888) 88-SOURCE | www.artisan-scientific.com

1-1 <BASE WL/FREQ> key

This key is used for setting the base wavelength/light frequency.

Please refer to the base wavelength /the base optical frequency setting in Table 5-1 for details of a set item.

Luminescence wavelength/an optical frequency becomes becoming to 0nm/THz if standard wavelength/an optical frequency is set offset wavelength/an optical frequency as well as standard wavelength/an optical frequency.

1-2 <OFFSET WL/FREQ> key

This key is used for setting the offset wavelength/light frequency based on the base wavelength/light frequency.

Please refer to the offset wavelength/the offset optical frequency setting in Table 5-1 for details of a set item.

Luminescence wavelength/an optical frequency (standard wavelength/optical frequency) becomes +(offset wavelength/optical frequency).

1-3 <BASE UNIT> key

This key is used for switching the unit of the base wavelength/light frequency to nm (wavelength) or THz (frequency).

The unit is switched every time it is pressed, highlighting the selected software key characters.

1-4 <OFFSET UNIT> key

This key is used for switching the unit of the offset wavelength/light frequency to nm (wavelength) or THz (frequency).

The unit is switched every time it is pressed, highlighting the selected software key characters.

1-5 <WL/FREQ> key

This key is used for switching the unit of the light emitting wavelength/light frequency to nm (wavelength) or THz (frequency).

The unit is switched every time it is pressed, highlighting the selected software key characters.

1-6 <CURRENT → BASE> key

This key is used for setting the base wavelength/light frequency to the light emitting wavelength/light frequency.

The offset becomes 0 nm/THz.

Artisan Scientific - Quality Instrumentation ... Guaranteed | (888) 88-SOURCE | www.artisan-scientific.com

Table 5-1 (1/3):Range of setting of wavelength/optical frequency (A)

	Menu display	AQ4320A	Step
Wavelength range set	WL	1480.000 to 1580.000nm	0.001nm
Optical frequency range set	FREQ	189.7421 to 202.5625THz	0.0001THz
Optical output range set	POWER	-20.0 to +8.0dBm	0.1dBm
[Note 1] (dBm)	PdB	-20.0 to +8.0dBm	0.1dBm
(mW)	PmW	0.010 to 6.310mW	0.001mW
Starting sweeping the wavelength set	START WL	1480.000 to 1580.000nm	0.001nm
Starting sweeping the optical frequency set	START FREQ	189.7421 to 202.5625THz	0.0001THz
Stopping sweeping the wavelength set	STOP WL	1480.000 to 1580.000nm	0.001nm
Stopping sweeping the optical frequency set	STOP FREQ	189.7421 to 202.5625THz	0.0001THz
Interval for sweeping the wavelength set	STEP WL	0.001 to 100.000nm	0.001nm
Interval for sweeping the optical frequency set	STEP FREQ	-12820.4 to -0.2GHz	0.1GHz
Step time set	STEP TIME	0.1 to 999.0sec	0.1sec
Sweeping time set	SWEEP TIME	1.0 to 99999.0sec	0.1sec
Sweep stop time set	SWEEP INTERVAL	0 to 99999sec	1sec
Base wavelength set	BASE WL	1480.000 to 1580.000nm	0.001nm
Base optical frequency set	BASE FREQ	189.7421 to 202.5625THz	0.0001THz
Offset wavelength set	OFFSET WL	-100.000 to +100.000nm	0.001nm
Offset optical frequency set	OFFSET FREQ	-12820.4 to +12820.4GHz	0.2GHz
internal chop frequency set	INT CHOP FREQ	0.20 to 300.00kHz	0.01kHz
Constant calibration intervals of time set	CAL INTERVAL	10 to 9999min	1min

* Sets with ten keys, the cursor key or the rotary encoder.

* The optical frequency setting does not operate by 0.0001THz step though can set with 0.0001THz due to optical frequency-wavelength conversion error occasionally.

[Note 1] The maximum value of the optical output range setting has the individual difference . The maximum value of the optical output range setting can be confirmed by "PDBMAX?" and "PMWMAX?" of a remote command.

Artisan Scientific - Quality Instrumentation ... Guaranteed | (888) 88-SOURCE | www.artisan-scientific.com

Table 5-1 (2/3):Range of setting of wavelength/optical frequency (B)

	Menu display	AQ4320B	Step
Wavelength range set	WL	1500.000 to 1580.000nm	0.001nm
Optical frequency range set	FREQ	189.7421 to 199.8616THz	0.0001THz
Optical output range set [Note 1] (dBm)	POWER	-20.0 to -3.0dBm	0.1dBm
	PdB	-20.0 to -3.0dBm	0.1dBm
(mW)	PmW	0.010 to 0.500mW	0.001mW
Starting sweeping the wavelength set	START WL	1500.000 to 1580.000nm	0.001nm
Starting sweeping the optical frequency set	START FREQ	189.7421 to 199.8616THz	0.0001THz
Stopping sweeping the wavelength set	STOP WL	1500.000 to 1580.000nm	0.001nm
Stopping sweeping the optical frequency set	STOP FREQ	189.7421 to 199.8616THz	0.0001THz
Interval for sweeping the wavelength set	STEP WL	0.001 to 80.000nm	0.001nm
Interval for sweeping the optical frequency set	STEP FREQ	-10119.5 to -0.2GHz	0.1GHz
Step time set	STEP TIME	0.1 to 999.0sec	0.1sec
Sweeping time set	SWEEP TIME	1.0 to 99999.0sec	0.1sec
Sweep stop time set	SWEEP INTERVAL	0 to 99999sec	1sec
Base wavelength set	BASE WL	1500.000 to 1580.000nm	0.001nm
Base optical frequency set	BASE FREQ	189.7421 to 199.8616THz	0.0001THz
Offset wavelength set	OFFSET WL	-80.000 to +80.000nm	0.001nm
Offset optical frequency set	OFFSET FREQ	-10119.5 to +10119.5GHz	0.2GHz
internal chop frequency set	INT CHOP FREQ	0.20 to 300.00kHz	0.01kHz
Constant calibration intervals of time set	CAL INTERVAL	10 to 9999min	1min

* Sets with ten keys, the cursor key or the rotary encoder.

* The optical frequency setting does not operate by 0.0001THz step though can set with 0.0001THz due to optical frequency-wavelength conversion error occasionally.

[Note 1] The maximum value of the optical output range setting has the individual difference . The maximum value of the optical output range setting can be confirmed by "PDBMAX?" and "PMWMAX?" of a remote command.

Artisan Scientific - Quality Instrumentation ... Guaranteed | (888) 88-SOURCE | www.artisan-scientific.com

Table 5-1 (3/3):Range of setting of wavelength/optical frequency (D)

	Menu display	AQ4320D	Step
Wavelength range set	WL	1520.000 to 1620.000nm	0.001nm
Optical frequency range set	FREQ	185.0571 to 197.2319THz	0.0001THz
Optical output range set [Note 1] (dBm)	POWER	-20.0 to +7.0dBm	0.1dBm
(dBm)	PdB	-20.0 to +7.0dBm	0.1dBm
(mW)	PmW	0.010 to 5.012mW	0.001mW
Starting sweeping the wavelength set	START WL	1520.000 to 1620.000nm	0.001nm
Starting sweeping the optical frequency set	START FREQ	185.0571 to 197.2319THz	0.0001THz
Stopping sweeping the wavelength set	STOP WL	1520.000 to 1620.000nm	0.001nm
Stopping sweeping the optical frequency set	STOP FREQ	185.0571 to 197.2319THz	0.0001THz
Interval for sweeping the wavelength set	STEP WL	0.001 to 100.000nm	0.001nm
Interval for sweeping the optical frequency set	STEP FREQ	-12820.4 to -0.2GHz	0.1GHz
Step time set	STEP TIME	0.1 to 999.0sec	0.1sec
Sweeping time set	SWEEP TIME	1.0 to 99999.0sec	0.1sec
Sweep stop time set	SWEEP INTERVAL	0 to 99999sec	1sec
Base wavelength set	BASE WL	1520.000 to 1620.000nm	0.001nm
Base optical frequency set	BASE FREQ	185.0571 to 197.2319THz	0.0001THz
Offset wavelength set	OFFSET WL	-100.000 to +100.000nm	0.001nm
Offset optical frequency set	OFFSET FREQ	-12820.4 to +12820.4GHz	0.2GHz
internal chop frequency set	INT CHOP FREQ	0.20 to 300.00kHz	0.01kHz
Constant calibration intervals of time set	CAL INTERVAL	10 to 9999min	1min

* Sets with ten keys, the cursor key or the rotary encoder.

* The optical frequency setting does not operate by 0.0001THz step though can set with 0.0001THz due to optical frequency-wavelength conversion error occasionally.

[Note 1] The maximum value of the optical output range setting has the individual difference . The maximum value of the optical output range setting can be confirmed by "PDBMAX?" and "PMWMAX?" of a remote command.

Artisan Scientific - Quality Instrumentation ... Guaranteed | (888) 88-SOURCE | www.artisan-scientific.com

5.4.5 TLS SET

This menu is used for setting the light power mode for CW, CHOP, etc., the screen display unit and so forth.

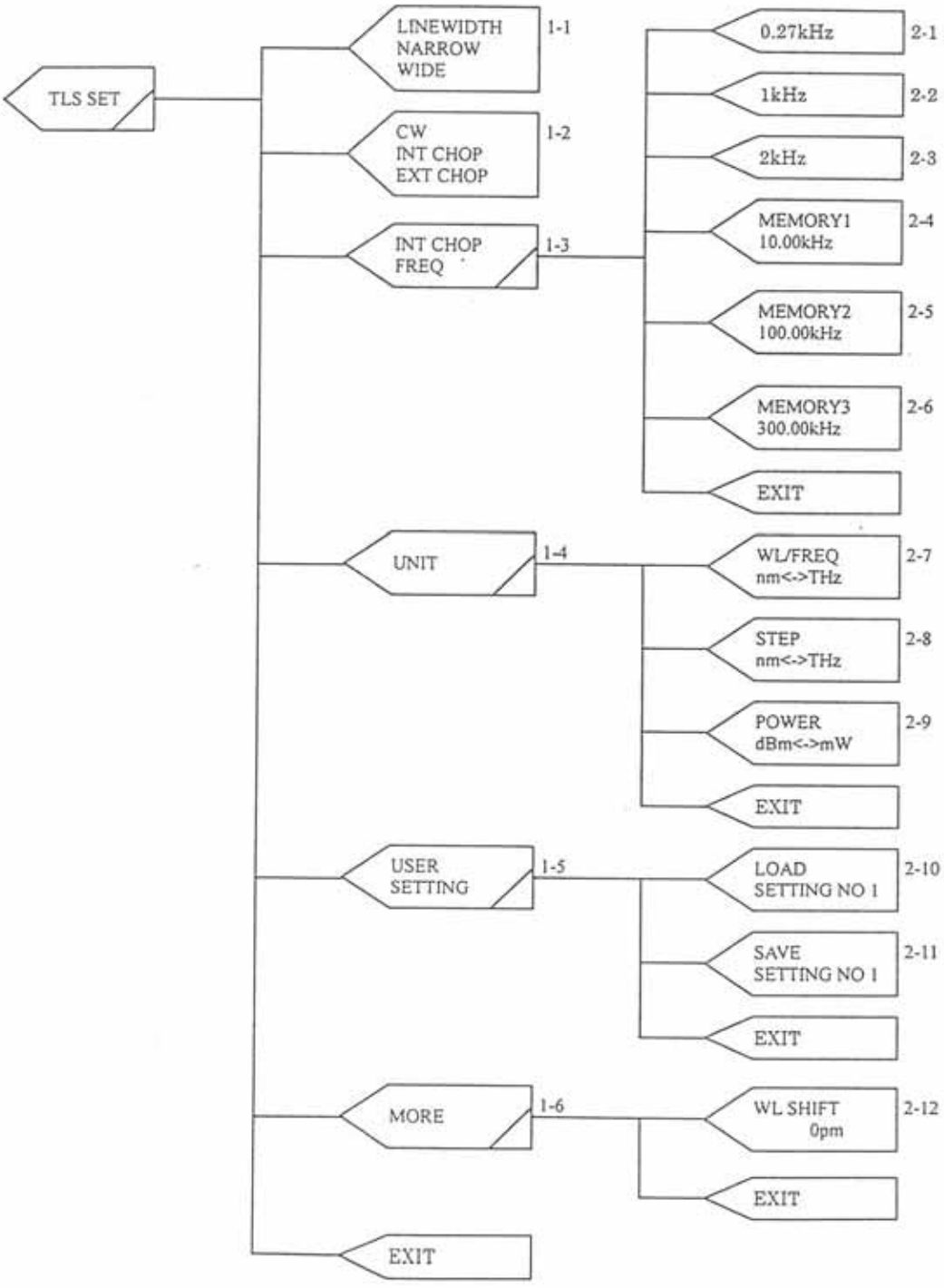

Artisan Scientific - Quality Instrumentation ... Guaranteed | (888) 88-SOURCE | www.artisan-scientific.com

1-1 <LINEWIDTH> key

This key is used for switching the spectral linewidth.

Two widths, "WIDE" and "NARROW", are switched every time it is pressed, highlighting the selected key characters.

When "NARROW is set, light having a narrow spectral line is emitted from the system. Narrow spectral lines may cause interference due to light return and thus deteriorate light intensity stability depending on the light line to be used. In this case, it is recommended to turn this setting to "WIDE" to select a wide spectral line.

Using wide spectral lines assures stable light intensity.

1-2 <CW/INT CHOP/EXT CHOP> key

This key is used for setting the modulating mode:

Three modes, CW, INT CHOP (internal chop) and EXT CHOP (external chop), are switched every time it is pressed, highlighting the selected key characters.

NOTE

- The CHOP frequency has the possibility which contains the error of 10% or less.
- The duty ratio of CHOP is 50%(typ). The duty ratio might change when the CHOP frequency is high.

1-3 <INT CHOP/FREQ> key

This key is used for opening the menu for setting the internal chop frequency.

The duty ratio might change when the CHOP frequency is high.

Numerical value (Refer to the internal chop range set in Table 5-1.) is directly input with ten keys, a cursor key, and a rotary encoder with internal CHOP set menu displayed and it is possible to fix by the ENTER key.(see 2.1 to 2.6).

1-4 <UNIT> key

This key is used for opening the menu for setting the units of the light emitting wavelength/light frequency and the light power (see 2-7 to 2-9).

1-5 <USER SETTING> key

This key is used for opening the menu for saving and calling the system parameter settings.

The setting (The file name:USR1 ENV to USR9 ENV) preserved here can be preserved on the floppy disk with FILE menu of SYSTEM(see 2-10 and 2-11).

Artisan Scientific - Quality Instrumentation ... Guaranteed | (888) 88-SOURCE | www.artisan-scientific.com

1-6 <MORE> key

The menu of the lower layer is displayed (see 2-12).

****

2-1 <0.27kHz> key

This key is used for setting the internal chop frequency at 0.27kHz.

2-2 <1kHz> key

This key is used for setting the internal chop frequency at 1kHz.

2-3 <2kHz> key

This key is used for setting the internal chop frequency at 2kHz.

2-4 <MEMORY1> key

This key is used for calling or setting the internal modulating frequency in MEMORY1.

Press the software key in order to call it, which sets the value in MEMORY1 to the internal modulating frequency.

For setting the frequency in MEMORY1, enter numeric values using numeric keys and press the <MEMORY1> key without pressing the [ENTER] key.

2-5 <MEMORY2> key

This key is used for calling or setting the internal modulating frequency in MEMORY2.

The calling and setting methods are the same as explained in "2.4 <MEMORY1> key".

2-6 <MEMORY3> key

This key is used for calling or setting the internal modulating frequency in MEMORY3.

The calling and setting methods are the same as explained in "2.4 <MEMORY1> key".

2-7 <WL/FREQ> key

This key is used for selecting whether the wavelength (nm) or frequency (THz) is used for the units for emitting light, starting and stopping sweeping.

The screen display is switched between the wavelength and the light frequency every time it is pressed, highlighting the selected software key characters.

Artisan Scientific - Quality Instrumentation ... Guaranteed | (888) 88-SOURCE | www.artisan-scientific.com

2-8 <STEP> key

This key is used for selecting whether the wavelength (nm) or frequency (THz) is used for the unit of the wavelength/light frequency sweeping interval.

The unit is switched every time it is pressed, highlighting the selected software key characters.

2-9 <POWER> key

This key is used for selecting whether "dBm" or "mW" is used for the unit of the light power.

The unit is switched every time it is pressed, highlighting the selected software key characters.

2-10 <LOAD SETTING> key

This key is used for calling the parameter setting saved using the <SAVE SETTING> key in 2-13.

Select one of patterns 0 to 9 using numeric keys or the rotary encoder.

The default setting is "0".

2-11 <SAVE SETTING> key

This key is used for saving the current setting.

Select one of Nos. 1 to 9 to be stored using numeric keys or the rotary encoder.

"0" cannot be used for saving since it is the default setting.

The saved setting can be called using the <LOAD SETTING> key in 2-10.

2-12 <WL SHIFT> key

The wavelength is done and setting by which a specified amount is shifted is done.

The amount of the shift is input with ten keys.

The wavelength actual only as for wavelength's worth specified for a present wavelength set value is shifted.

The shifted set amount is effective until setting is changed.

Artisan Scientific - Quality Instrumentation ... Guaranteed | (888) 88-SOURCE | www.artisan-scientific.com

5.4.6 PROGRAM

This is used for displaying the program list.

Light emitting conditions, sweeping procedure and the like can be registered as programs to run.

The registered programs are stored in the built-in hard disk or can be stored in the inserted floppy disk.

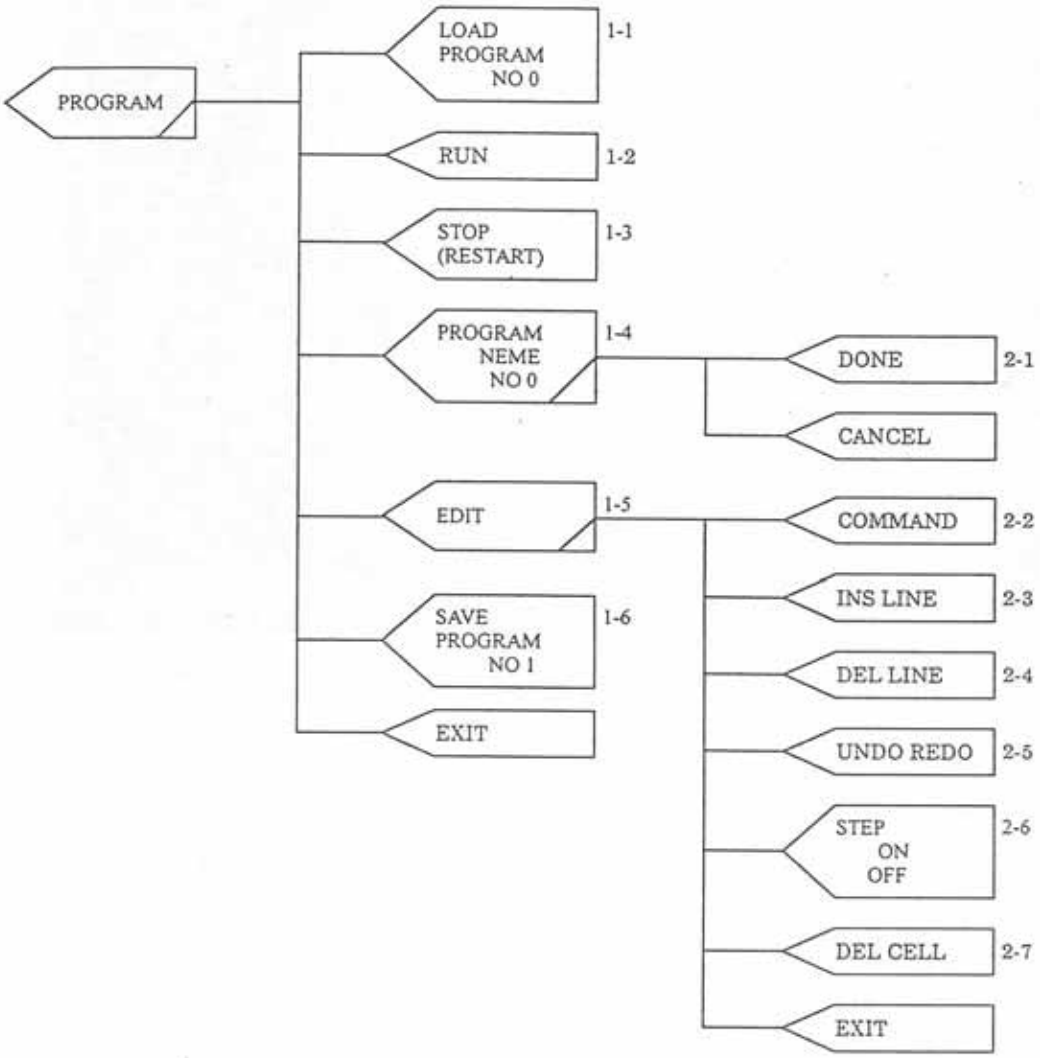

Artisan Scientific - Quality Instrumentation ... Guaranteed | (888) 88-SOURCE | www.artisan-scientific.com

Pressing the <PROGRAM> key in 5.4.2 displays the program select screen in Fig. 5-7.

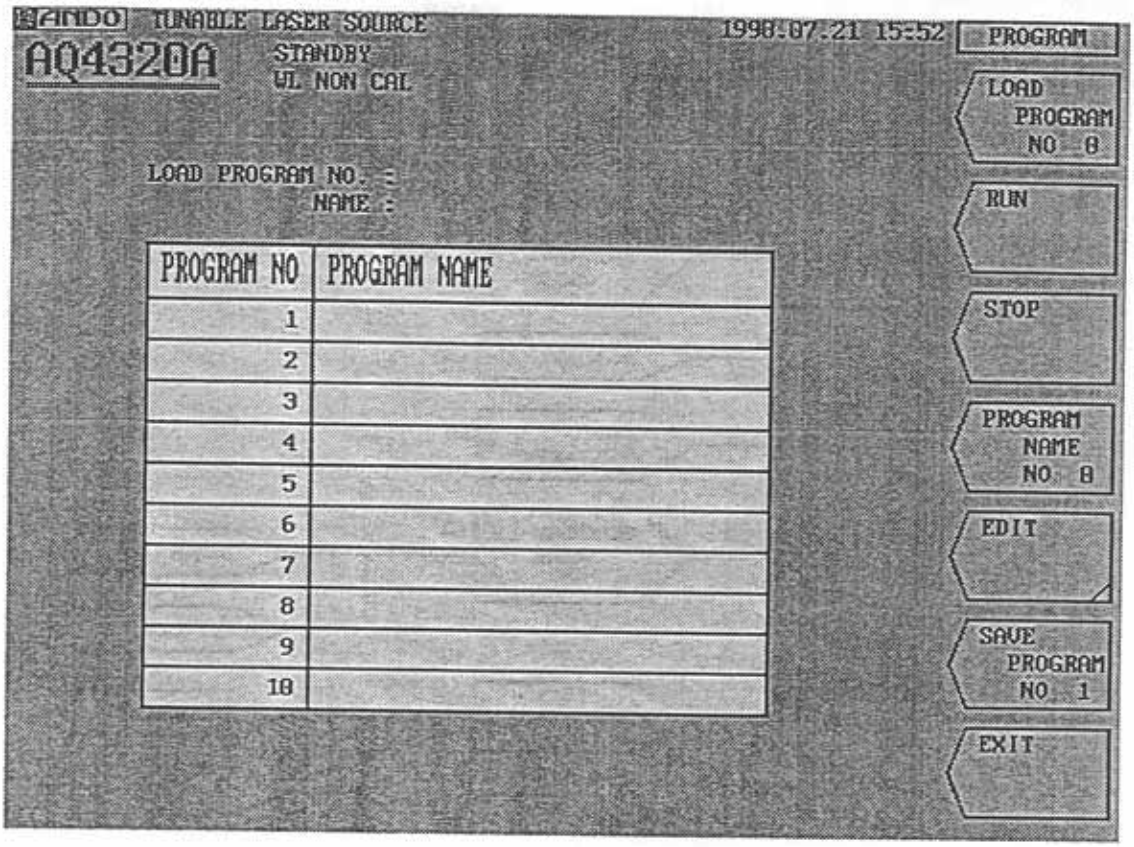

Fig. 5-7: Program select screen

1-1 <LOAD PROGRAM NO *> key

This key is used to load the registered program from a built-in hard disk into the memory of this apparatus. The program loaded into the memory is executed or can be edited. After pressing the key, select the program No. using the [↑] or [↓] key and press the [ENTER] key to load the program.

The loaded program No. and name are displayed on the LOAD PROGRAM NO. and NAME columns in Fig. 5-7.

When the program not registered is loaded, the program which has already been loaded and the program under the edit are overwrited by the program of emptiness.

Artisan Scientific - Quality Instrumentation ... Guaranteed | (888) 88-SOURCE | www.artisan-scientific.com

1-2 <RUN> key

This key is used for running the loaded program. The screen executing the program is displayed in Figure 5-8. The execution program and line No. under execution are displayed in the item of the system status.

Keys other than STOP become invalid during the program execution.

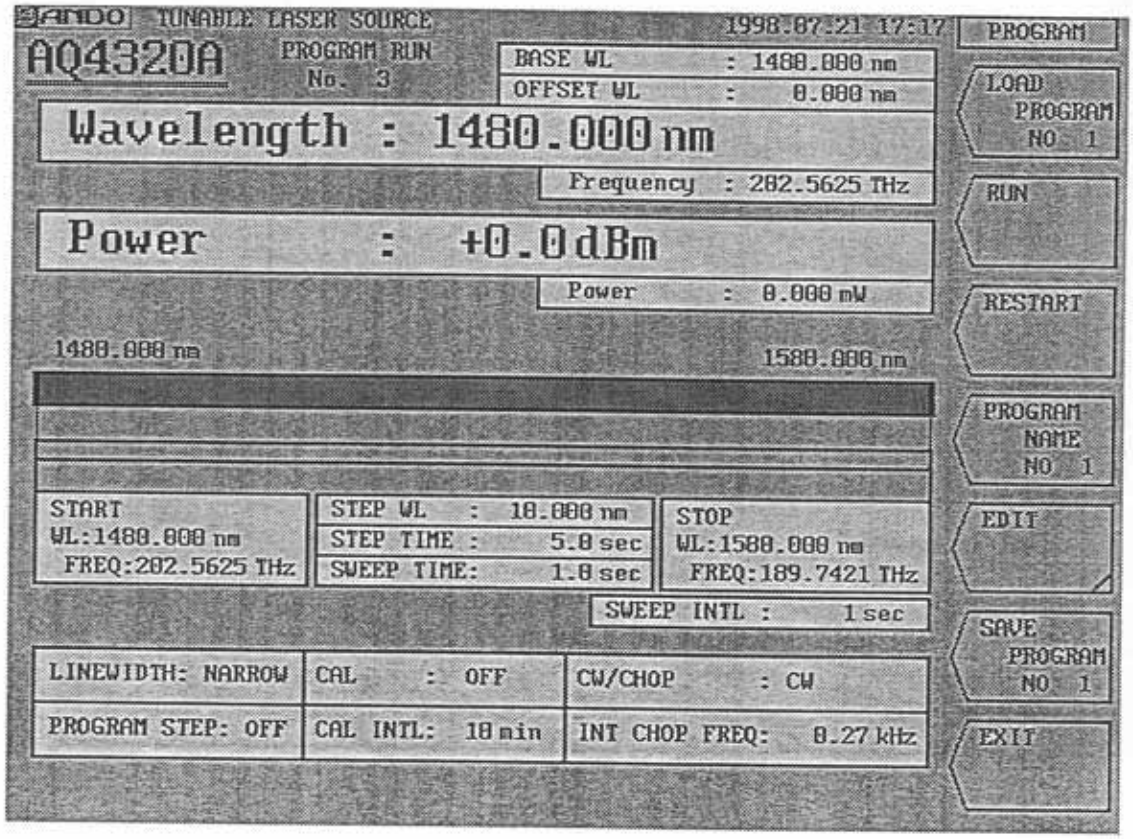

Fig. 5-8: Program execution screen

1-3 <STOP> key

This key is used for stopping and restarting the running program.

Pressing the key during the program execution stops wavelength sweeping and displays "RESTART". Pressing the key during "RESTART" is displayed restarts wavelength sweeping from the wavelength stop position.

The stop with the STOP key stops when the processing of the program line under execution ends.

1-4 <PROGRAM NAME> key

This key is used for naming the program selected on the screen in Fig. 5-7. The character is selected with ten keys, the cursor key or the rotary encoder and the selection is fixed with the ENTER key. The program name is 30 letters max.

Pressing the <DONE> key displays a confirmation message. Press the [ENTER] key to determine the name or the <CANCEL> key to cancel this processing.

Artisan Scientific - Quality Instrumentation ... Guaranteed | (888) 88-SOURCE | www.artisan-scientific.com

1-5 <EDIT> key

This key is used for editing programs.

Pressing the key displays the program edit screen (EDIT screen) in Fig. 5-9.

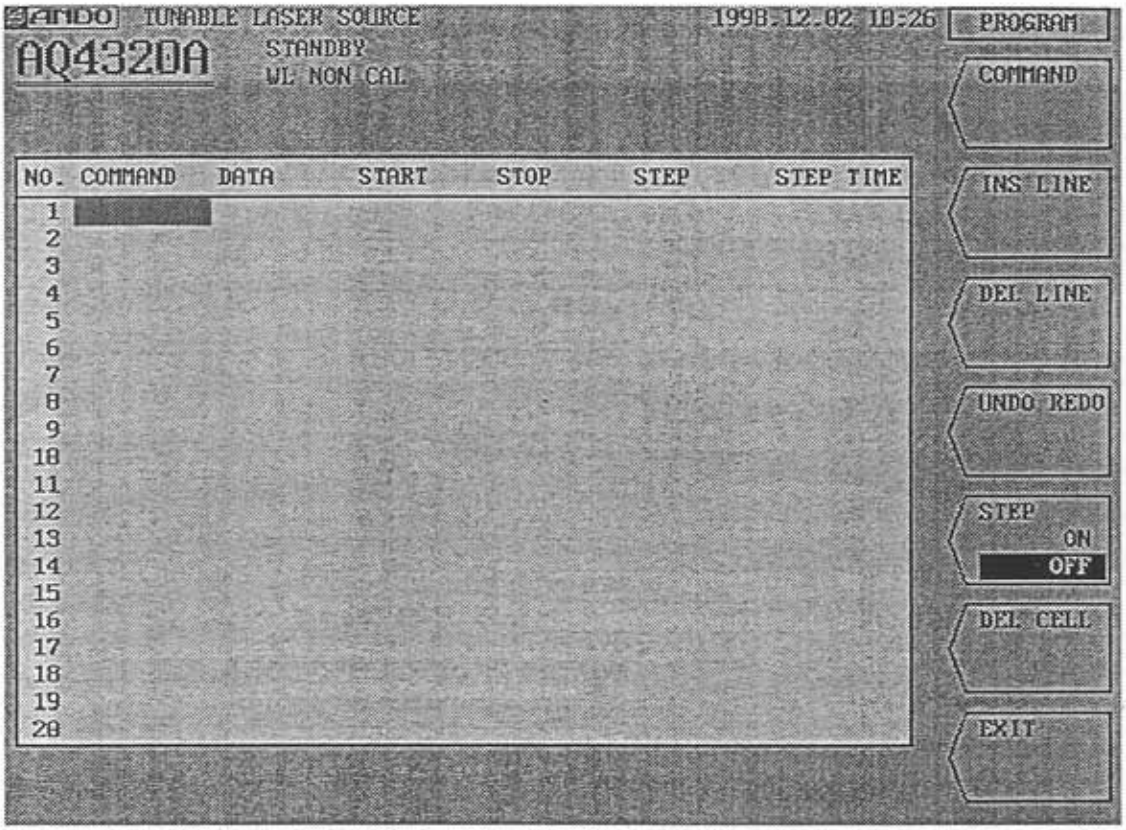

Fig. 5-9: EDIT screen

LINE NO: Program of up to 200 lines can be input.

COMMAND: Refer to "Table 5-2: Program command list" in 2-2.

DATA: Enter data required for commands.

START: Enter sweep start wavelength of wavelength/light frequency or sweep start output of optical output using numeric values.

STOP: Enter sweep start wavelength of wavelength/light frequency or sweep stop output of optical output using numeric values.

STEP: Enter sweep start wavelength of sweeping wavelength/light frequency or step output of optical output using numeric values.

STEP TIME: Enter step time of sweeping wavelength/light frequency step using numeric values.

For details on each setting, refer to Table 5-2 in 2-2.

Artisan Scientific - Quality Instrumentation ... Guaranteed | (888) 88-SOURCE | www.artisan-scientific.com

1-6 <SAVE PROGRAM NO *> key

This key is used for saving the program being edited. Programs can be preserved up to 10.

The program (The file name:PRO1 TXT to PRO10 TXT) preserved here can be preserved on the floppy disk with FILE of SYSTEM.

Program NO. is selected with ten keys, the cursor key or the rotary encoder on the screen in the table of PROGRAM shown in clause 1-1 and this key is pushed. After a confirmation message appears, press the [ENTER] key to store the program or the <CANCEL> key to cancel this processing.

The file of the program is preserved in the USER directory of D drive.

Moreover, the program number enters ** by PRO**.TXT as for the file name.

(ex.) program number file name

1	PRO1.TXT
5	PRO5.TXT
10	PRO10.TXT

****

2-1 <DONE> key

This key is used for determining program names.

Artisan Scientific - Quality Instrumentation ... Guaranteed | (888) 88-SOURCE | www.artisan-scientific.com

2-2 <COMMAND> key
This key is used for selecting commands.
Pressing the key displays the command select screen in Fig. 5-10.

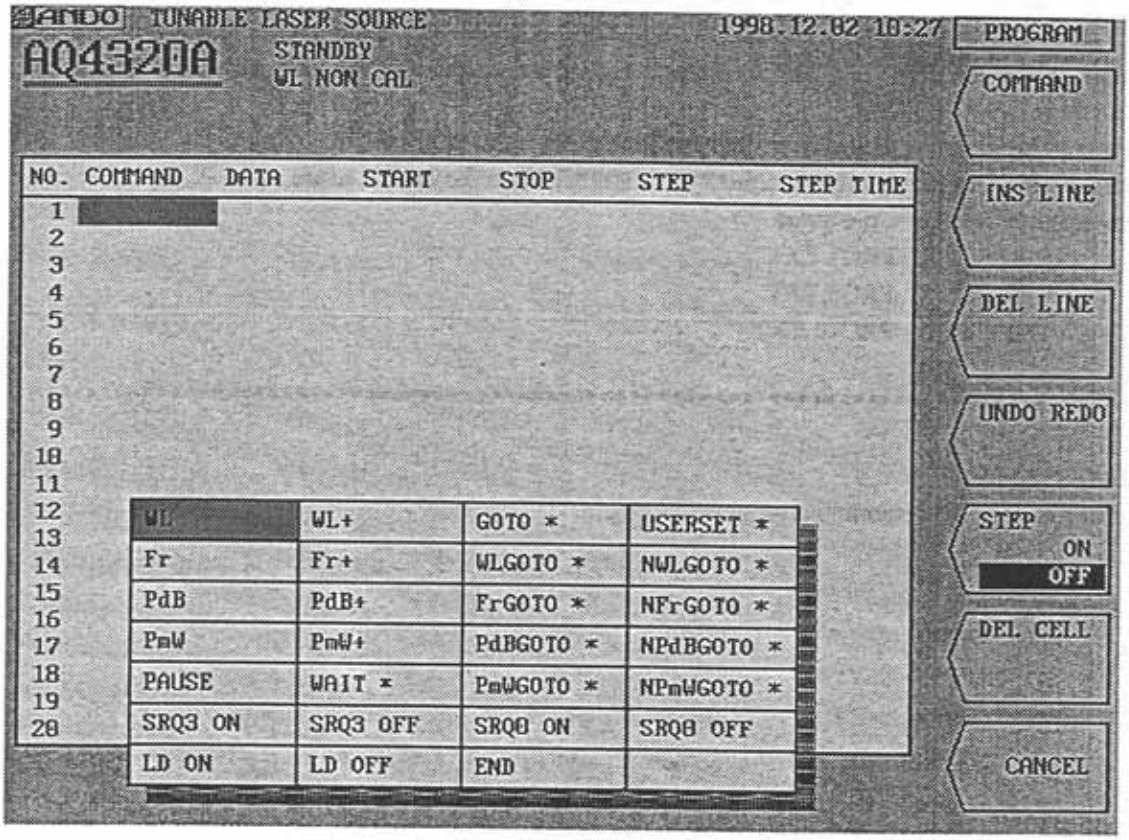

Fig. 5-10: Command select screen

Highlight your desired command using the cursor keys. Pressing the [ENTER] key confirms the setting. For a command marked "*", enter numeric values as necessary after the command is confirmed and the cursor moves to "DATA", "START", "STOP", "STEP" or "TIME". For details on the program commands, refer to Table 5-2.

Artisan Scientific - Quality Instrumentation ... Guaranteed | (888) 88-SOURCE | www.artisan-scientific.com

Table 5-2 (1/3): Program command list

Command	Range	Description
USERSET *	0 to 9	Calls the user setting (refer to 1-5 in 5.4.5).
WL	Refer to Table 5-1	Sets the wavelength. Refer to Table 5-1 Wavelength range set
Fr	Refer to Table 5-1	Sets the light frequency. Refer to Table 5-1 Optical frequency range set
WL+		The wavelength is moved from present wavelength by the relative wavelength.
Fr+		The frequency is moved from a present frequency by a relative frequency.
PdB	Refer to Table 5-1	Sets the light output (dBm). Refer to Table 5-1 Optical output range set (dBm)
PmW	Refer to Table 5-1	Sets the light output (mW). Refer to Table 5-1 Optical output range set (mW)
PdB+		An optical output is changed from an optical output of present by a relative, optical output. (dBm)
PmW+		The output is changed from an optical output of present by a relative, optical output. (mW)

LD ON		Emits LD.
LD OFF		Stops LD emission.

END		Transmits SRQ BIT3 to stop the program.
WAIT *	0.1 to 9999.0sec 0.1sec step	Waits for the set time.
PAUSE		Pauses the program (restarted by the <STOP PAUSE CONT> key).

GOTO *	1 to 200	Goes to line number (*).
WLGOTO *	1 to 200	Goes to the line number specified by DATA if the wavelength is equal to that specified by STOP.
FrGOTO *	1 to 200	Goes to the line number specified by DATA if the light frequency is equal to that specified by STOP.
NWLGOTO *	1 to 200	Goes to the line number specified by DATA unless the wavelength is equal to that specified by STOP.
NFrGOTO *	1 to 200	Goes to the line number specified by DATA unless the light frequency is equal to that specified by STOP.
PdBGOTO *	1 to 200	Goes to the line number specified by DATA if the light output is equal to that specified by STOP.
PmWGOTO *	1 to 200	Goes to the line number specified by DATA if the light output is equal to that specified by STOP.
NPdBGOTO *	1 to 200	Goes to the line number specified by DATA unless the light output is equal to that specified by STOP.
NPmWGOTO *	1 to 200	Goes to the line number specified by DATA unless the light output is equal to that specified by STOP.

SRQ3 ON		Enables SRQ BIT3 to be transmitted (for details on SRQ, refer to the descriptions in Table 6-2 in 6.1.2).
SRQ3 OFF		Disables SRQ BIT3 from being transmitted (for details on SRQ, refer to the descriptions in Table 6-2 in 6.1.2).
SRQ0 ON		Enables SRQ BIT0 to be transmitted (for details on SRQ, refer to the descriptions in Table 6-2 in 6.1.2).
SRQ0 OFF		Disables SRQ BIT0 from being transmitted (for details on SRQ, refer to the descriptions in Table 6-2 in 6.1.2).

Artisan Scientific - Quality Instrumentation ... Guaranteed | (888) 88-SOURCE | www.artisan-scientific.com

Table 5-2 (2/3): Program command list

Data setting command						
COMMAND	DATA	START	STOP	STEP	STEP TIME	Description
USERSET	*					Calls user settings 0 to 9.
WL		****.***.				Sets the wavelength.
WL		****.***	****.***	***.***	***.*	Conducts the step sweep.
WL		****.***	****.***		***.*	Conducts the continuous sweep.
WL+				±***.***		Moves the wavelength by the specified step from the current one.
Fr		***.****				Sets the light frequency.
Fr		***.****	***.****	−*****.*	***.*	Conducts the step sweep.
Fr		***.****	***.****		***.*	Conducts the continuous sweep.
Fr+				±*****.*		Moves the light frequency by the specified step from the current one.
PdB		±**.*				Sets the light output in dBm.
PdB		±**.*	±**.*	±**.*	***.*	Step-sweeps the light output in dBm.
PdB+				±**.*		Changes the light output by the specified step in dBm from the current one.
PmW		**.***				Sets the light output in mW.
PmW		**.***	**.***	**.***	***.*	Step-sweeps the light output in mW.
PmW+				±**.***		Changes the light output by the Specified step in mW from the current one.

Program control command						
COMMAND	DATA	START	STOP	STEP	STEP TIME	Description
PAUSE						Pauses the program (restarted by the <RESTART> key).
WAIT	****.*					Pauses the program for the period specified by DATA.
END						Transmits SRQ3 to stop the program.

Artisan Scientific - Quality Instrumentation ... Guaranteed | (888) 88-SOURCE | www.artisan-scientific.com

Table 5-2 (3/3): Program command list

Branch command						
COMMAND	DATA	START	STOP	STEP	STEP TIME	Description
GOTO	***					Goes to the line number specified by DATA.
WLGOTO	***		****.***			Goes to the line number specified by DATA if the wavelength is equal to that specified by STOP.
NWLGOTO	***		****.***			Goes to the line number specified by DATA unless the wavelength is equal to that specified by STOP.
FrGOTO	***		***.****			Goes to the line number specified by DATA if the light frequency is equal to that specified by STOP.
NFrGOTO	***		***.****			Goes to the line number specified by DATA unless the light frequency is equal to that specified by STOP.
PdBGOTO	***		±**.*			Goes to the line number specified by DATA if the light output is equal to that specified by STOP.
NPdBGOTO	***		±**.*			Goes to the line number specified by DATA unless the light output is equal to that specified by STOP.
PmWGOTO	***		**.***			Goes to the line number specified by DATA if the light output is equal to that specified by STOP.
NPmWGOTO	***		**.***			Goes to the line number specified by DATA unless the light output is equal to that specified by STOP.

System control command						
COMMAND	DATA	START	STOP	STEP	STEP TIME	Description
LD ON						Emits LD.
LD OFF						Stops LD emission.
SRQ3 ON						Enables SRQ BIT3 to be emitted (default).
SRQ3 OFF						Disables SRQ BIT3 from being emitted.
SRQ0 ON						Enables SRQ BIT0 to be emitted (default).
SRQ0 OFF						Disables SRQ BIT0 from being emitted.

- For each command data setting range, refer to that for manual operation (however, WAIT = 0.1 to 9999.0 sec in 0.1 step and line number = 1 to 200)
- For SRQ, refer to the descriptions in Table 6-2.

Artisan Scientific - Quality Instrumentation ... Guaranteed | (888) 88-SOURCE | www.artisan-scientific.com

2-3 <INS LINE> key
This key is used for inserting one line in front of the selected line.

2-4 <DEL LINE> key
This key is used for deleting the selected line.

2-5 <UNDO REDO> key
This key is used for canceling the previous editing or recovering the canceled operation.

2-6 <STEP> key
This key is used for pausing the running program every step.
On: This function enabled.
Off: This function disabled.
On and off is switched every time the key is pressed.
In order to proceed to the following step, press the <STOP (RESTART)> key after pause.
During remote operation, however, this function is disabled even if the key is set to ON.

2-7 <DEL CELL>key
Contents of the cell of the program are deleted.

Artisan Scientific - Quality Instrumentation ... Guaranteed | (888) 88-SOURCE | www.artisan-scientific.com

Table 5-3 shows typical programs.

Table 5-3: Typical programs

LINE NO	COMMAND	DATA	START	STOP	STEP	TIME	Description
Program 1							
1	USERSET	1					Calls user setting 1.
2	WL		1480				Sets the wavelength at 1480nm.
3	PdB		0				Sets the light output at 0dBm.
4	SRQ0 ON						Transmits SRQ BIT0 every step operation.
5	WL		1480	1580	1	1	Moves the wavelength from 1480nm to 1580nm in 1nm step by pausing it for 1 second every step.
6	SRQ0 OFF						Stops SRQ BIT0 emission.
7	END						Stops the program.
Program 2							
1	USERSET	2					Calls user setting 2.
2	WL		1480				Sets the wavelength at 1480nm.
3	PdB		0				Sets the light output at 0dBm.
4	SRQ0 ON						Transmits SRQ BIT0 every step operation.
5	PdB		-10	0	1	1	Moves the wavelength from -10dBm to 0dBm in 1dB step by pausing it for 1 second every step.
6	SRQ0 OFF						Stops SRQ BIT0 emission.
7	END						Stops the program.
Program 3							
1	USERSET	3					Calls user setting 3.
2	WL		1500				Sets the wavelength at 1500nm.
3	PdB		0				Sets the light output at 0dBm.
4	SRQ0 ON						Transmits SRQ BIT0 every step operation.
5	WL		1500	1550	1	2	Moves the wavelength from 1500nm to 1550nm in 1nm step by pausing it for 2 seconds every step.
6	SRQ0 OFF						Stops SRQ BIT0 emission.
7	PdB+				-1		Changes the light output by -1 dB from the current one.
8	NPdBGOTO	4		-10			Goes to line number 4 unless the light output is -10dBm.
9	END						Stops the program.

Artisan Scientific - Quality Instrumentation ... Guaranteed | (888) 88-SOURCE | www.artisan-scientific.com

5.4.7 SYSTEM

This menu is used for setting the conditions for the screen display, the printer, the GP-IB and RS-232C interfaces and the wavelength calibration as well as the password. It also enables the wavelength to be calibrated.

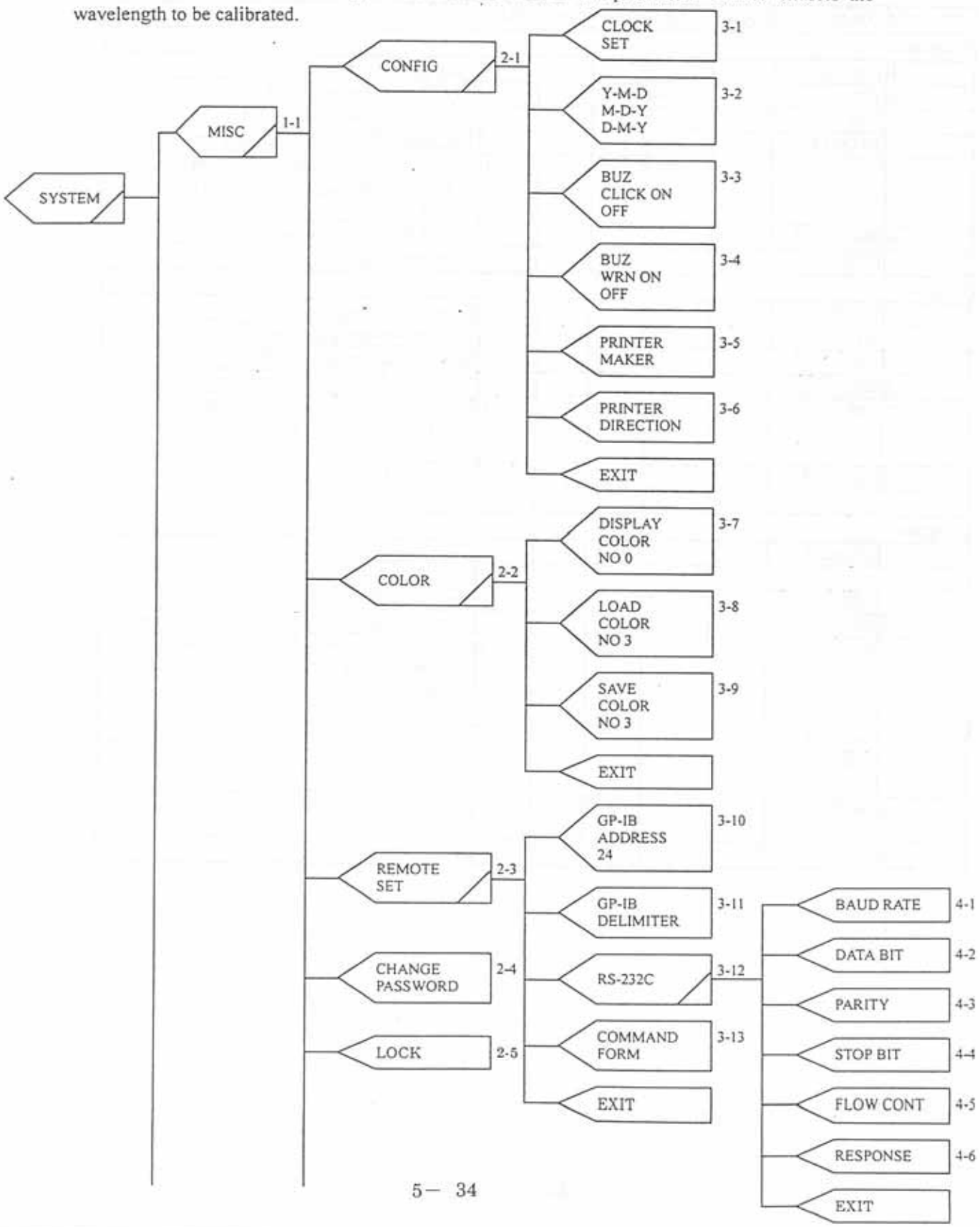

Artisan Scientific - Quality Instrumentation ... Guaranteed | (888) 88-SOURCE | www.artisan-scientific.com

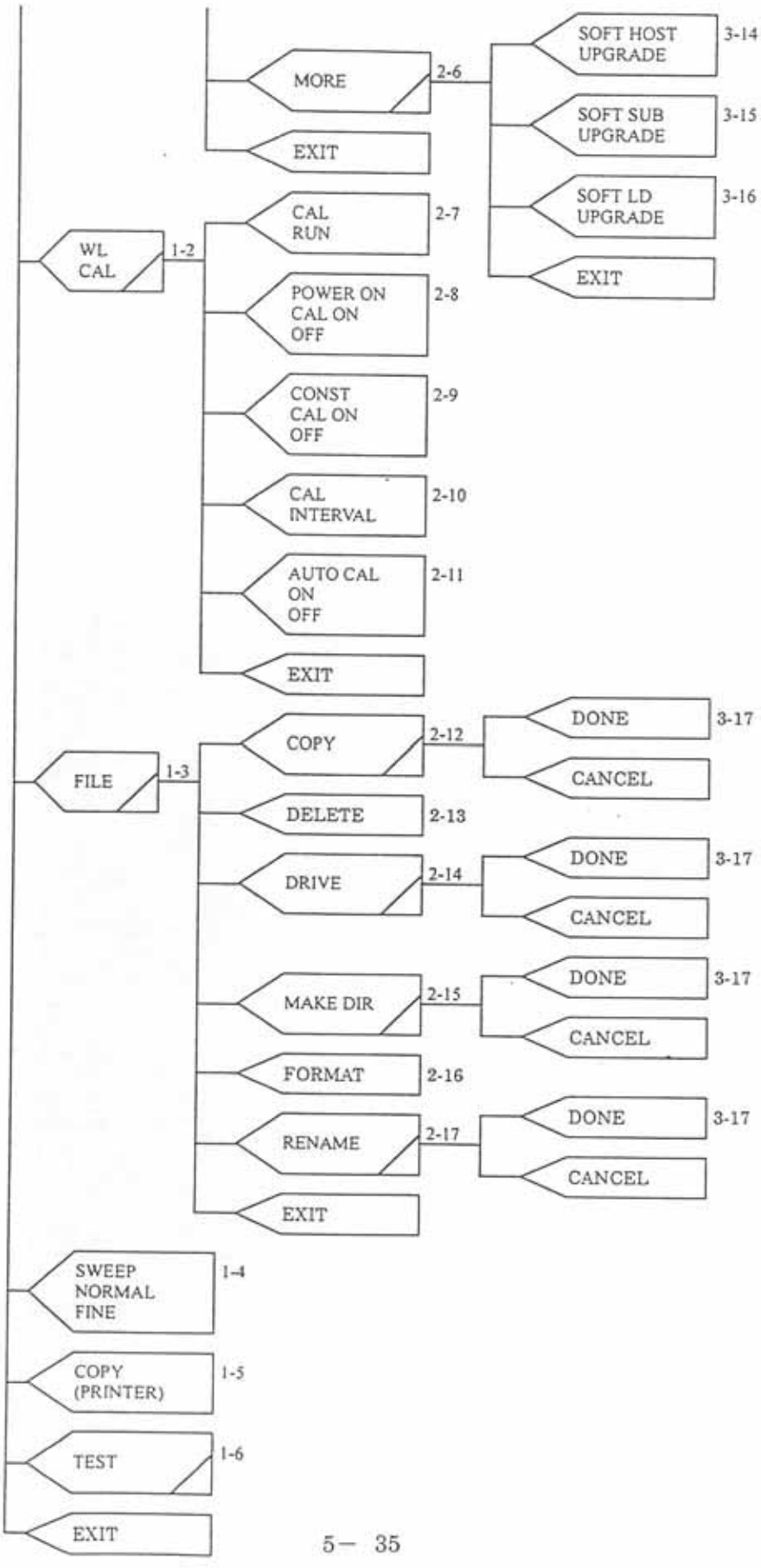

Artisan Scientific - Quality Instrumentation ... Guaranteed | (888) 88-SOURCE | www.artisan-scientific.com

1-1 <MISC> key

This key is used for opening the menu for setting the conditions for the environment (date, time, buzzer and printer), the display screen color and the GP-IB and RS-232C interfaces as well as the password (see 2-1 to 2-6).

1-2 <WL CAL> key

This key is used for opening the menu for calibrating the wavelength and sets the environment of the calibration. (see 2-7 to 2-11).

1-3 <FILE> key

This key is used for opening the menu for controlling files as shown in Fig. 5-10.

This menu enables file copy, delete, drive change, directory making and floppy disk formatting (see 2-12 to 2-17)

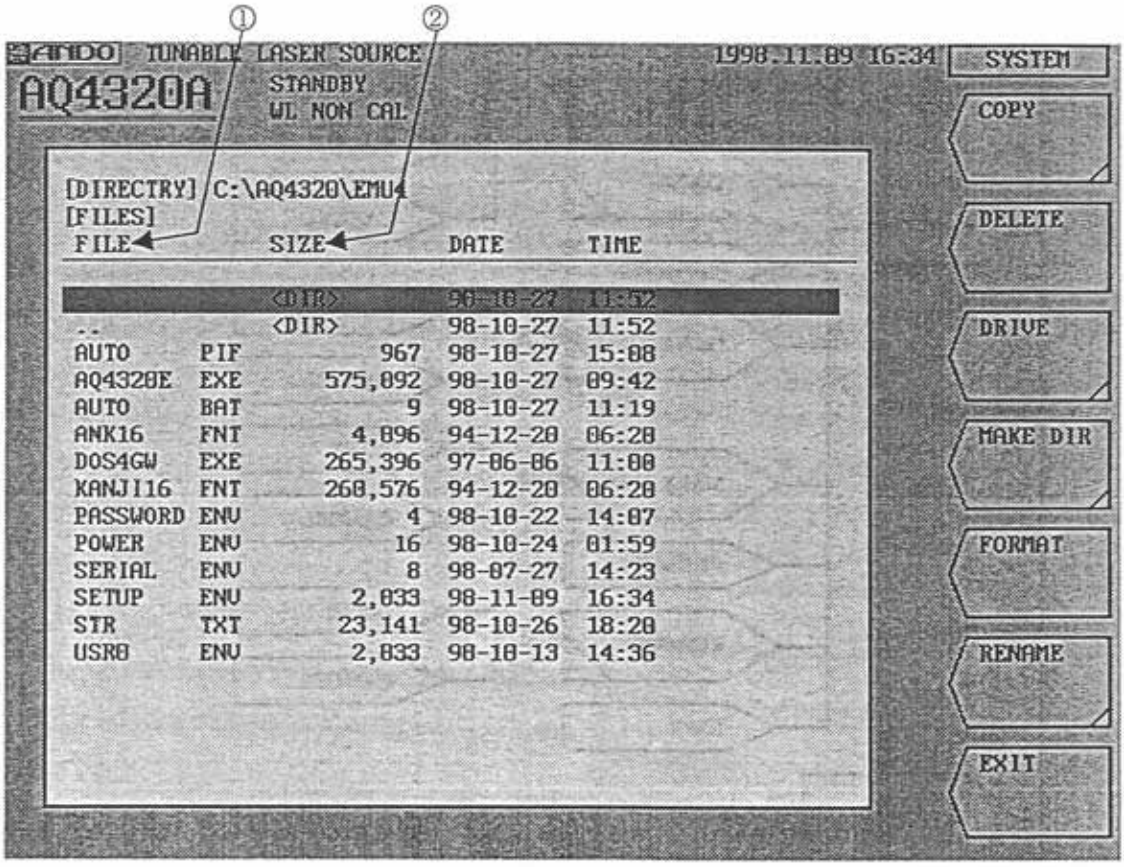

Fig. 5-11: File menu screen

Artisan Scientific - Quality Instrumentation ... Guaranteed | (888) 88-SOURCE | www.artisan-scientific.com

The setting (The file name:USR1 ENV to USR9 ENV) preserved with USER SETTING of TLS SET can be preserved on the floppy disk.

The program (The file name:PRO1 TXT to PRO10 TXT) preserved with SAVE PROGRAM NO * can be preserved on the floppy disk.

The screen in Fig. 5-11 is operated as follows:

Select your desired file or directory using the [↑] or [↓] key.

If <DIR> is displayed in column {2}, the type of {1} FILE is a directory.

If numeric values are displayed in {2}, the type of {1} FILE is a file.

Selecting a directory and pressing the [ENTER] key moves to the hierarchy of the directory, displaying it and files contained.

Selecting a part marked "." in {1} and "<DIR>" in {2} and pressing the [ENTER] key redisplays the current directory (display not changed).

Selecting a part marked ".." in {1} and "<DIR>" in {2} and pressing the [ENTER] key moves to the next upper hierarchy, displaying the directory.

1-4 <SWEEP NORMAL/FINE> key

This key sets wavelength (optical frequency) setting more highly accurate.

Although the "FINE" mode enables high-precision sweep, it requires longer time.

Although the "NORMAL" mode sets usual wavelength.

1-5 <COPY> key

This key outputs the condition of setting present from the printer connected with the printer port in the back as a hard copy of the screen.

1-6 <TEST> key

This key is used for setting the test mode.

This key is designed to be used for adjustment at the plant and thus not normally used.

Although a message prompting a password to be entered appears after the key is pressed, the state can be canceled by pressing the <CANCEL> key.

⚠ Warning

Note that there is a possibility being deleted for file of user's making when an illegal password is input.

****

Artisan Scientific - Quality Instrumentation ... Guaranteed | (888) 88-SOURCE | www.artisan-scientific.com

2-1 <CONFIG> key

This key is used for opening the menu for setting the environmental conditions (date, time, buzzer and printer) (see 3-1 to 3-6).

2-2 <COLOR> key

This key is used for opening the menu for setting the display screen color (see 3-7 to 3-9).

2-3 <REMOTE SET> key

This key is used for opening the menu for setting the GP-IB and RS-232C interfaces (see 3-10 to 3-13).

2-4 <CHANGE PASSWORD> key

This key is used for changing the password for turning on or locking the system. For changing the password, enter the old and new passwords in this order using numeric keys (enter the new one twice to confirm it). Be sure to enter four numeric values for the password (any password with three or less values is invalid).

2-5 <LOCK> key

This key is used for locking the system.

When the system is locked, no operation except unlocking is enabled.

The password is required to be entered for locking or unlocking the system.

2-6 <MORE> key

The menu of the lower layer is displayed (see 3-14 to 3-16).

2-7 <CAL RUN> key

This key is used for calibrating the wavelength.

Artisan Scientific - Quality Instrumentation ... Guaranteed | (888) 88-SOURCE | www.artisan-scientific.com

2-8 <POWER ON CAL ON/OFF> key

It is decided whether to execute the wavelength calibration at once after the password is input when the power supply is turned on. The wavelength calibration is automatically executed at "ON".

⚠ Warning

When set pushing < CAL RUN > key or < POWER ON CAL ON/OFF > key in "CAL ON" and turn on the power supply <AUTOCAL ON/OFF > key is set in "AUTOCAL ON", the wavelength is calibrated.

Since the light is emitted from the light output part during wavelength calibration, be sure to close the connector protection cap (see 5-1).

2-9 <CONST CAL ON/OFF> key

This key is used for turning wavelength calibration to run at a constant interval on and off.

On and off is switched every time the key is pressed, highlighting the selected software key characters.

The calibration interval can be set using the <CAL INTERVAL> key explained in 2-10 below.

The wavelength is not calibrated during wavelength sweep and the program execution while the equipment is controlling remotely even if this setting is ON.

Do the error check on software and do wavelength calibration because the system error (error code 22) occurs while remotely controlling.

2-10 <CAL INTERVAL> key

This key is used for setting the constant calibration interval.

The wavelength is calibrated at a constant interval when the <CONST CAL> key explained in 2-9 above is set to ON. The range is set using the numeric keys or the rotary encoder(Refer to Table 5-1 Constant calibration intervals of time set).

2-11 <AUTO CAL> key

This key switches ON/OFF of the wavelength proofreading automatically done when the standby operation ends.

ON/OFF changes whenever this key is pushed and the software key character in the selection is displayed in reverse video.

The wavelength is not calibrated during wavelength sweep and the program execution while the equipment is controlling remotely even if this setting is ON.

Do the error check on software and do wavelength calibration because the system error (error code 23) occurs while remotely controlling.

Artisan Scientific - Quality Instrumentation ... Guaranteed | (888) 88-SOURCE | www.artisan-scientific.com

2-12 <COPY> key

This key is used for copying files.

Select the file to copy on the screen in Fig. 5-11 (refer to 1-3 for how to operate the screen). Pressing the <COPY> key displays the screen for entering the name of the file to paste (Fig. 5-12). In order to enter the name, select letters using the cursor keys and press the [ENTER] key to confirm it. The file name must be within 8 letters and the extension within four including "." (within 12 letters in total. e.g. "ABCDEFGH.DAT").

Pressing the <DONE> key displays a confirmation message. Press the [ENTER] key to copy or the <CANCEL> key to cancel this processing.

Directories, however, cannot be copied.

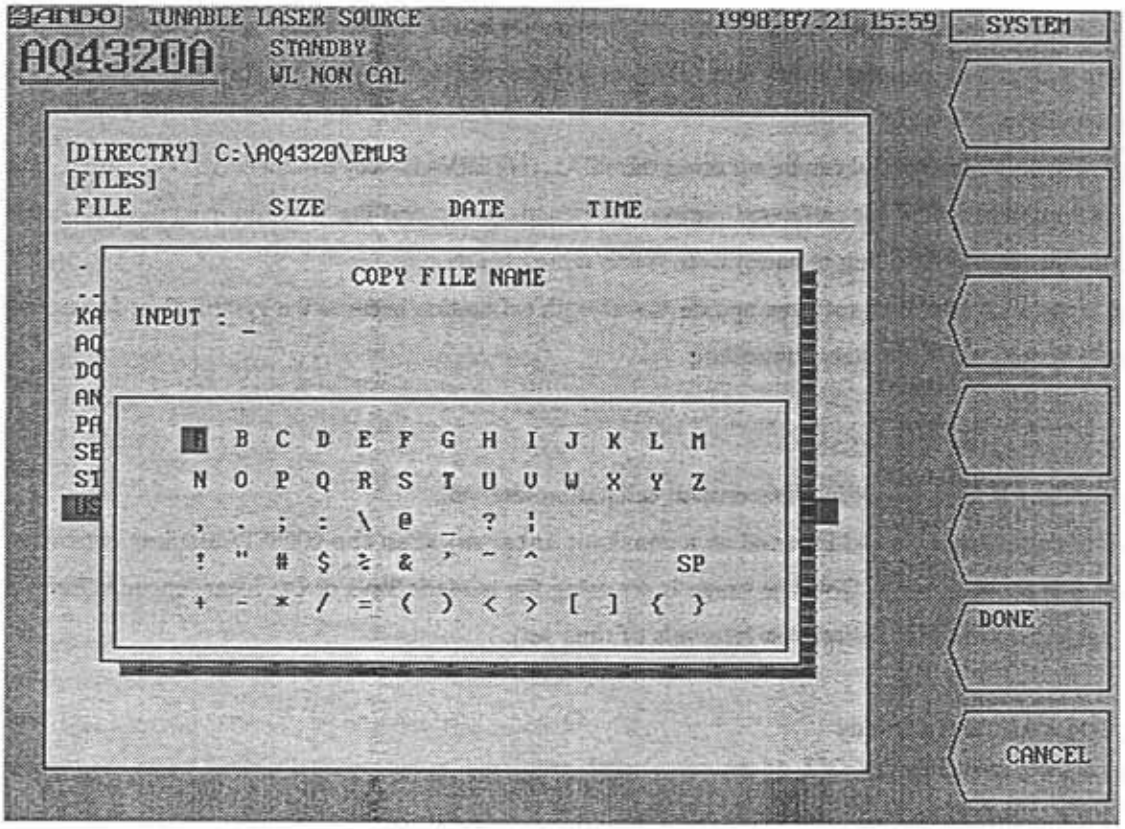

Fig. 5-12: File name entry screen

Artisan Scientific - Quality Instrumentation ... Guaranteed | (888) 88-SOURCE | www.artisan-scientific.com

For example, a file is copied from the built-in hard disk to the inserted floppy disk as follows:
Set the hard disk using the <DRIVE> key in 2-13 (refer to 2-13 for how to use the key).
Next, select the file to copy (refer to 1-3) and press the <COPY> key. Enter "\" between the directory and file names to paste.
In the case of the drive = "A" (floppy disk), the directory name = "ABC" and the file name = "AB", enter as follows:
A:\ABC\AB
(ABC\AB when copying to the D drive (hard disk))
At this time, up to 108 letters (including ":" and "\") can be entered.
Pressing the <DONE> key displays a confirmation message. Press the [ENTER] key to copy or the <CANCEL> key to cancel this processing.

2-13 <DELETE> key
This key is used for deleting files or directories.
After selecting the file or directory to delete using the [↑] or [↓] key and pressing the <DELETE> key, a confirmation message appears. Press the [ENTER] key to delete the file or directory or the <CANCEL> key to cancel this processing.

Artisan Scientific - Quality Instrumentation ... Guaranteed | (888) 88-SOURCE | www.artisan-scientific.com

2-14 <DRIVE> key

This key is used for changing drives. Pressing the <DRIVE> key displays the screen in Fig. 5-13. Select "A" using the cursor keys and confirm it using the [ENTER] key to select the floppy disk drive or "D" to select the hard disk drive. Directories, however, cannot be specified.

The "C" drive cannot be selected since it is the system area.

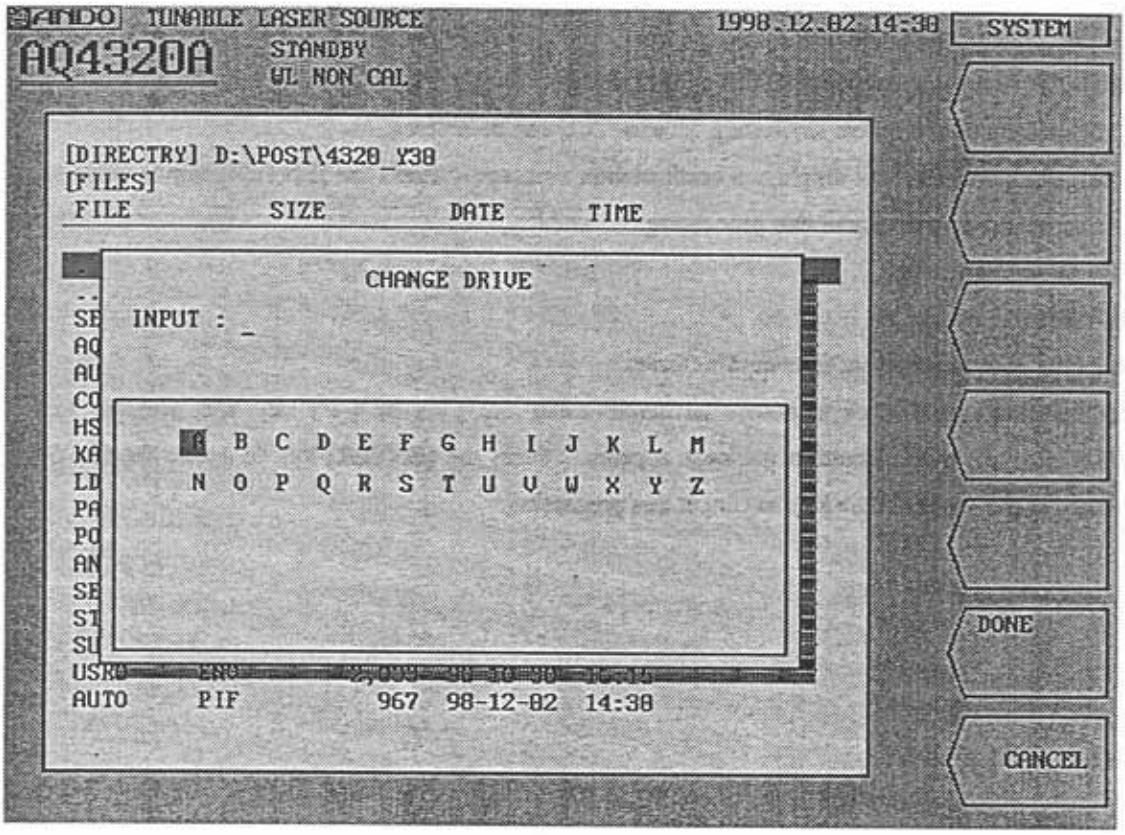

Fig. 5-13: Drive change screen

Artisan Scientific - Quality Instrumentation ... Guaranteed | (888) 88-SOURCE | www.artisan-scientific.com

2-15 <MAKE DIR> key

This key is used to making a new directory in the directory displayed on the screen in Fig. 5-11. Pressing the <MAKE DIR> key displays the directory name entry screen shown in Fig. 5-14. In order to enter the name, select letters using the cursor keys and confirm it using the [ENTER] key. The directory name must be within 8 letters and the extension within four including "." (within 12 letters in total. e.g. "ABCDEFGH.DAT").

Pressing the <DONE> key displays a confirmation message. Press the [ENTER] key to make the directory or the <CANCEL> key to cancel this processing.

When making directory "ABCD" in directory "ABC", enter as follows:

ABC\ABCD

At this time, up to 108 letters (including "\") can be entered.

Pressing the <DONE> key displays a confirmation message. Press the [ENTER] key to make the directory or the <CANCEL> key to cancel this processing.

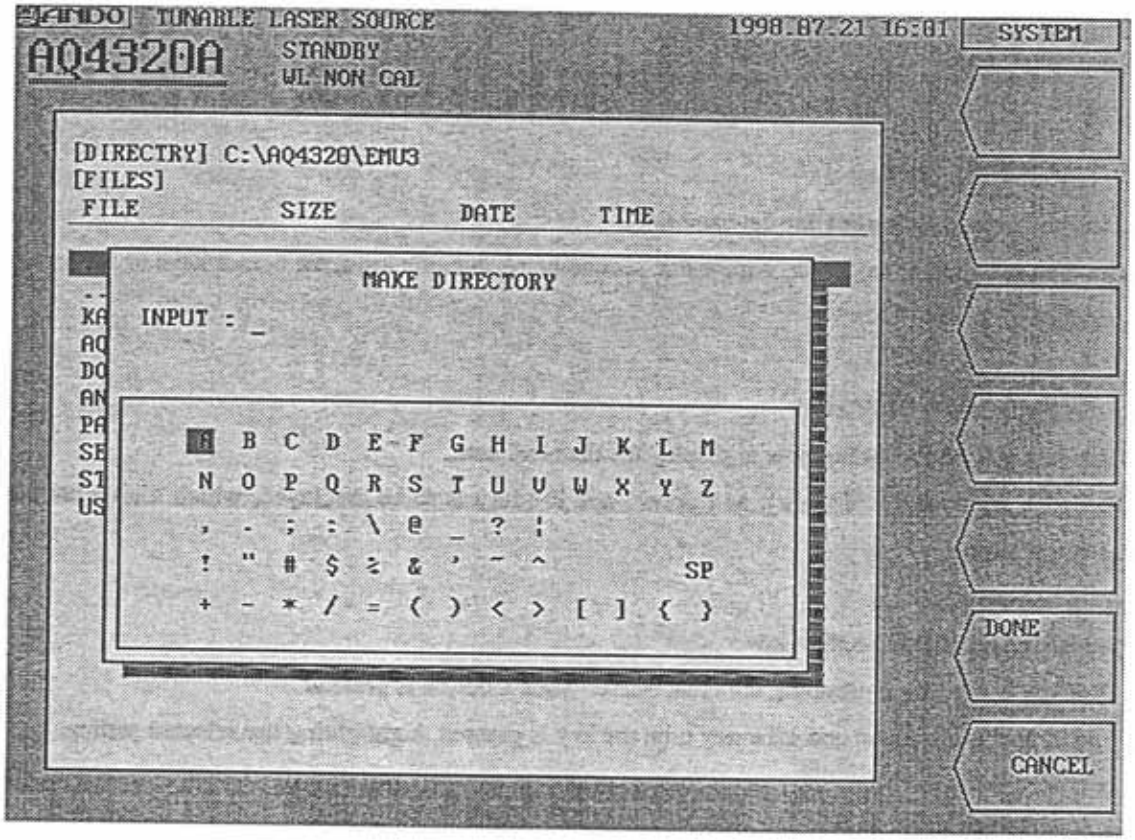

Fig. 5-14: Directory name entry screen

Artisan Scientific - Quality Instrumentation ... Guaranteed | (888) 88-SOURCE | www.artisan-scientific.com

2-16 <FORMAT> key

This key is used for formatting floppy disks to the 1.44MB format.

Pressing the <FORMAT> key displays a confirmation message. Press the [ENTER] key to format or the <CANCEL> key to cancel this processing.

2-17 <RENAME> key

The file name is changed with this key.

Select the file to change the file name on the screen in Fig. 5-11 (refer to 1-3 for how to operate the screen). Pressing the <RENAME> key displays the screen for entering the name of the file to paste (Fig. 5-12). In order to enter the name, select letters using the cursor keys and press the [ENTER] key to confirm it. The file name must be within 8 letters and the extension within four including "." (within 12 letters in total. e.g. "ABCDEFGH.DAT").

Pressing the <DONE> key displays a confirmation message. Press the [ENTER] key to change the file name or the <CANCEL> key to cancel this processing.

****

3-1 <CLOCK SET> key

This key is used for setting the date and time.

Set the year, month, day, hour, minute and second using numeric keys, the cursor keys or the rotary encoder.

3-2 <YMD/MDY/DMY> key

This key is used for setting how to display the date and time.

Select in which order Y (year), M (month) and D (day) is to be displayed, which highlights the selected setting.

3-3 <BUZ CLICK ON/OFF> key

This key is used for controlling the click buzzer when a button is pressed.

The buzzer is turned on and off every time the key is pressed, highlighting the selected setting.

3-4 <BUZ WRN ON/OFF> key

This key is used for controlling the buzzer in case of warning.

The buzzer is turned on and off every time the key is pressed, highlighting the selected setting.

Artisan Scientific - Quality Instrumentation ... Guaranteed | (888) 88-SOURCE | www.artisan-scientific.com

3-5 <PRINTER MAKER> key

This key is used for setting the maker of the printer to be connected to the printer connector on the rear panel in order to print the screen.

Select NEC (PC-PR201), "EPSON (ESC/P)", "CANON (LipsII)", or POSTSCRIPT using the cursor keys ([←] and [→]). Pressing the [ENTER] key confirms the selected setting.

Confirm setting in a support of the connected printer of each maker's individual mode and an individual mode.

3-6 <PRINTER DIRECTION> key

This key is used for setting the direction of the printer paper.

Select "HORIZONTAL" or "VERTICAL" using the cursor keys ([←] and [→]). Pressing the [ENTER] key confirms the selected setting.

3-7 <DISPLAY COLOR> key

This key is used for calling the screen color.

Select one of patterns 0 to 9 using numeric keys or the rotary encoder. 0 to 2 cannot be changed since they are the default settings. 3 to 9 can be changed and registered.

3-8 <LOAD COLOR> key

This key is used for calling the reference screen to be used for changing the screen color.

Select one of patterns 0 to 9 using numeric keys, the cursor keys or the rotary encoder and adjust it.

The color can be changed by changing the screen color settings displayed on the lowest part of the screen.

For details, refer to 4.2.2.

3-9 <SAVE COLOR> key

This key is used for saving the screen color set using the <LOAD COLOR> key.

Select one of Nos. 3 to 9 to be saved using numeric keys, the cursor keys or the rotary encoder.

0 to 2 cannot be saved since they are the default settings.

After saving, the display color is also changed to the saved setting.

The saved pattern can be called using the <DISPLAY COLOR> key.

Artisan Scientific - Quality Instrumentation ... Guaranteed | (888) 88-SOURCE | www.artisan-scientific.com

3-10 <GP-IB ADDRESS> key

This key is used for setting the GP-IB address of this system.

The settable range is 0 to 30, which is set using numeric keys, the cursor keys or the rotary encoder.

3-11 <GP-IB DELIMITER> key

This key is used for setting the delimiter.

Select either "*[EOI]" or "*[CR+LF]" + "[EOI]" using the cursor keys ([←] and [→]). Pressing the [ENTER] key confirms the selected setting.

3-12 <RS 232C> key

This key is used for opening the menu for setting the RS-232C interfaces (see 4-1 to 4-6).

3-13 <COMMAND FORM> key

This key is used for setting the command format.

Select "ANDO", "CFORM1" or "CFORM2" using the cursor keys ([←] and [→]). Pressing the [ENTER] key confirms the selected setting.

For details on the command format, refer to Chapter 6

3-14 <SOFT HOST UPGRADE> key

Uses for the version up of the software (HOST) of this container.

3-15 <SOFT SUB UPGRADE> key

Uses for the version up of the software (SUB) of this container.

3-16 <SOFT LD UPGRADE> key

Uses for the version up of the software (LD) of this container.

3-17 <DONE> key

This key is used for determination and execution.

****

Artisan Scientific - Quality Instrumentation ... Guaranteed | (888) 88-SOURCE | www.artisan-scientific.com

4-1 <BAUD RATE> key

This key is used for setting the baud rate.

Select 2,400, 4,800, 9,600 or 19,200bit/sec using the cursor keys ([←] and [→]). Pressing the [ENTER] key confirms the selected setting.

4-2 <DATA BIT> key

This key is used for setting the data bit.

Select 7- or 8-bit using the cursor keys ([←] and [→]). Pressing the [ENTER] key confirms the selected setting.

4-3 <PARITY> key

This key is used for setting the parity.

Select "NON", "EVEN" or "ODD" using the cursor keys ([←] and [→]). Pressing the [ENTER] key confirms the selected setting.

4-4 <STOP BIT> key

This key is used for setting the stop bit.

Select "1" or "2" using the cursor keys ([←] and [→]). Pressing the [ENTER] key confirms the selected setting.

4-5 <FLOW CONT> key

This key is used for setting FLOW CONT.

Select "NON", "Xon/Xoff" or "HARDWARE" using the cursor keys ([←] and [→]). Pressing the [ENTER] key confirms the selected setting.

Artisan Scientific - Quality Instrumentation ... Guaranteed | (888) 88-SOURCE | www.artisan-scientific.com

4-6 <RESPONSE> key

This key is used for setting response.

Select "NON", "* [CR]" or "* [CR]" + ">" using the cursor keys ([←] and [→]) and press the [ENTER] key to confirm it.

Since "LF" is always added to response, it is output as follows:

NON: LF

"* [CR]": "* [CR][LF]"

"* [CR]" + ">":"* [CR][LF]" + ">"

BAUD RATE	DATA BIT	PARITY	STOP BIT	FLOW CONT	RESPONSE
2400	7	NON	1	NON	NON
4800	8	EVEN	2	Xon/Xoff	"*[CR]"
9600		ODD		HARDWARE	"*[CR]"+ ">"
19200					

indicate the default settings.

Artisan Scientific - Quality Instrumentation ... Guaranteed | (888) 88-SOURCE | www.artisan-scientific.com

5.5 Error Message

This system displays errors in Table 5-4. Check the contents and take appropriate measures.

Table 5-4 (1/3): Error code list

Error code	Contents	Measures
0	RAM error (main unit)	The system is required to be repaired.
1	RAM error (LD drive circuit)	The system is required to be repaired.
2	RAM error (optical power meter circuit)	The system is required to be repaired.
3	RAM error (external unit)	The system is required to be repaired.
4		
5		
6		
7	System initialization error	Turn the power off to restart.Repair is required if the same error repeatedly occurs.
8	Motor operation error	Turn the power off to restart.Repair is required if the same error repeatedly occurs.
9	TLS wavelength calibration error	Turn the power off to restart.Repair is required if the same error repeatedly occurs.
10	TLS light output calibration error	For maintenance.
11	Data transmission to SUB CPU failed	Turn the power off to restart.Repair is required if the same error repeatedly occurs.
12	No response from SUB CPU	Turn the power off to restart.Repair is required if the same error repeatedly occurs.
13		
14	Externally connected printer not ready	Check the printer.
15	Printer I/O error	Check the printer.
16	Printer off-line	Check the printer.
17	No paper in printer	Check the printer.
18		
19	Printer buffer memory secure error	The system is required to be repaired.
20	Light output exceeded the upper limit	Reduce the light output setting.
21	Password entry failed	Enter a correct password.
22	CONST CAL execution error remotely	
23	AUTO CAL execution error remotely	
24		
25		
26		
27		
28		
29		

Artisan Scientific - Quality Instrumentation ... Guaranteed | (888) 88-SOURCE | www.artisan-scientific.com

Table 5-4 (2/3): Error code list

Error code	Contents	Measures
40	SWEEP DATA is not an adjustment.	Change the conditions.
41	Specified directory not found	Check the directory.
42	Specified drive not found	Check the drive
43	File copy failed	Check if the disk to paste is full.
44	File delete failed	Check if the floppy disk is write-protected.
45	Directory making failed	Check if the disk to paste is full.
46	Same directory exists	Change the name.
47	Floppy disk formatting failed	Check if the floppy disk is write-protected.
48	Environmental file (back-up) read failed	The system is required to be repaired.
49	Environmental file (back-up) write failed	The system is required to be repaired.
50		
51		
52	FONT file (KANJI16) read failed	The system is required to be repaired.
53	FONT file (ANK16) read failed	The system is required to be repaired.
54	FONT file (DOS/V) read failed	The system is required to be repaired.
55	The PROGRAM file cannot be read.	The system is required to be repaired.
56	The PROGRAM file cannot be written.	The system is required to be repaired.
57		
58	The sentence structure in PROGRAM is amusing.	Please edit the made program again.
59	END is not found while programming.	Please edit the made program again.
60	The password file cannot be read.	The system is required to be repaired.
61		
62	The cereal No. file cannot be read.	The system is required to be repaired.
63		
64	The input data exceeded the range.	Try to input the data.
65	The optical output data file cannot be read.	The system is required to be repaired.
66		
67		
68	The file name cannot be changed.	Please confirm the change file name.
69		

Artisan Scientific - Quality Instrumentation ... Guaranteed | (888) 88-SOURCE | www.artisan-scientific.com

Table 5-4 (3/3): Error code list

Error code	Contents	Measures
80	No transmission response	Check the connection of the GP-IB or RS-232C interface and controller control software.
81	Receiving buffer memory secure error	The system is required to be repaired.
82	Transmission buffer overflow	Check GP-IB or RS-232C control software.
83	Invalid command received	Check GP-IB or RS-232C commands.
84	The data exceeded an effective range.	Reduce transmission data to or less than the set range.
85		
86	RS-232C overrunning error	Please confirm setting STOP BIT.
87	RS-232C parity error	Please confirm setting PARITY.
88	RS-232C fureiming error	Please confirm setting DATA BIT.
89		
90		
91		
92		
93		
94		
95		
96		
97		
98		
99		
100		
101		
102	VERSION UP program (SUB) cannot be read.	Please confirm the floppy disk.
103	The optical proofreading file cannot be read.	The system is required to be repaired.
104		
105		
106	The LD program for VERSION UP cannot be read.	Please confirm the floppy disk.
107		
108		
109		

Artisan Scientific - Quality Instrumentation ... Guaranteed | (888) 88-SOURCE | www.artisan-scientific.com

Chapter 6 Remote Control

The AQ4320 has the standard GPIB (IEEE 488.1 standard satisfied) and RS-232C interfaces. When you attach a controller, you can set up and modify each AQ4320 parameter and send and receive data under fully remote control.

6.1 GPIB control

⚠ Caution

Always turn OFF the POWER switch ("▀ OFF") before connecting or disconnecting the GPIB interface cable to/from the AQ4320.

⚠ Caution

The AQ4320 does not accept any GPIB command immediately after its power-on but before password input.

6.1.1 Interface functions

Table 6-1: GPIB interface functions

Function	Explanation
SH1	All source handshaking functions
AH1	All acceptor handshaking functions
T7	Talker functions
L4	Listener functions
SR1	Service request functions
RL1	Remote/local functions
PP0	No parallel polling functions
DC1	Device clear functions
DT0	No device trigger functions
C0	No control functions
E1	Open collector driver

Artisan Scientific - Quality Instrumentation ... Guaranteed | (888) 88-SOURCE | www.artisan-scientific.com

6.1.2 Explanation of basic system functions

(1) GPIB address

You can change the GPIB address of AQ4320 by following the steps of Paragraph 3-10 given in Section 5.4.7. These addresses are made valid immediately after you have completed the setup. The modified addresses are backed up by the hard disk. The initial value is "24".

(2) Local control mode

When the AQ4320 is operated by using its operation keys, it operates in Local control mode. All AQ4320 keys are available to use.

(3) Remote control mode

When the AQ4320 is operated from another controller via the GPIB interface bus, it operates in Remote control mode. All keys (except for LOCAL) are made invalid. During Remote control, all LCDs light and the bottom software key functions as the LOCAL key.

(4) Local Lockout (LLO)

When an LLO universal command is issued in Remote control mode, the AQ4320 is locally locked out (LLO). All keys (including the LOCAL key) are made invalid. You can release the LLO status by issuing the REN (Remote Enable) command only.

(5) Device Clear (DCL) and Selective Device Clear (SDC)

You can clear the AQ4320's send and receive buffers by issuing the DCL universal command or SDC address command in Remote control mode.

⚠ Caution

Set approximately 100msec of wait time immediately after you have issued the Device Clear command. Some controllers may stop handshaking if you execute various commands and program codes immediately after the DCL or SDL command.

---

(6) Available range of remote control

The AQ4320 has almost the same control functions as its manual operations. For details, see Table 6-3 "GPIB and RS-232C interface commands (AQ4320)."

(7) Send and receive buffers

The AQ4320 has the 512-byte send and receive buffers (to store CR, LF and other control codes and commas (,)).

Artisan Scientific - Quality Instrumentation ... Guaranteed | (888) 88-SOURCE | www.artisan-scientific.com

(8) Service request functions

Table 6-2 defines the contents of SRQ status byte of the AQ4320.

Table 6-2: SRQ status byte

BIT	Contents
BIT7	0
BIT6	1 when an SRQ is sent.
BIT5	1 when the receive buffer is overflowed.
BIT4	0
BIT3	1 when operation is completed.
BIT2	1 during an error
BIT1	0
BIT0	1 when optical output setting is completed wavelength

Bit-0 operation conditions	Bit-3 operation conditions
When optical output setting is completed	When wavelength sweep ends
When wavelength setting is completed	When program ends
	Standby operation completion
	Initialization operation completion
	Wavelength proofreading operation completion

The service request functions can be masked for each cause. Commands 0 to 255 in binary notation correspond to bits 7 to 0 of STB. Logical 1 bit is valid and logical 0 bit is invalid.
(However, BIT6 cannot be invalidated.)

Example 1: If the program code is "I65"

Decimal value 65 is "01000001" in binary notation. Bit 6 and bit 0 are valid. Therefore, when the motor sweep has completed, a service request is issued to the controller. Otherwise, no service request is issued to the controller.

Example 2: If the program code is "I255"

Decimal value 255 is "11111111" in binary notation. Therefore, all bits are valid.

If the mask condition of service request functions is changed, the status byte is cleared. Also, the service request to the controller is cancelled if issued.

Example 3: If the program code is "I65" and when the motor sweep has completed

Bits 0 and 6 are set to logical 1, and a service request is issued to the controller. If this service request is ignored and if program code "I66" is set, bits 0 and 6 are cleared. The STB is set to 0, and the service request is also canceled.

(9) The comma (,) program codes can be repeated and sent.

Artisan Scientific - Quality Instrumentation ... Guaranteed | (888) 88-SOURCE | www.artisan-scientific.com

(10) Space in the program code is disregarded.

(11) The delimiter from the controller is "CR+LF+EOI", "CR+LF", or "LF+EOD" codes. The delimiter of AQ4320 output is "CR+LF+(EOI)" or "EOI" code only.

(12) Numerical codes 0 below the decimal point need not be input in the numeric input part (*** . *** etc). Example: "TSTEWL010.000" can be entered as "TSTEWL10".

(13) During wavelength (optical frequency) sweep, no program codes are accepted.

6.1.3 GPIB and RS-232C interface commands

Table 6-3 lists the GPIB and RS-232C interface commands supported by the AQ4320. Table 6-4 gives the compatibility of these commands, and Table 6-5 lists the Hewlett Packard's (HP) commands NOT supported by the AQ4320.

The GPIB and RS-232C interface commands slightly differ from each other.

⚠ Caution

The AQ4320's commands may differ from the compatible commands of other manufacturers in their operations and return values. Carefully use them when replacing the commands.

An asterisk (*) of ANDO command (*IDN? and *RST are excluded.), such as "xxx*", represents a single numerical character.

Example: TWL****.***
The numerical value represents the wavelength.

Artisan Scientific - Quality Instrumentation ... Guaranteed | (888) 88-SOURCE | www.artisan-scientific.com

Table 6-3 (1/10): GPIB and RS-232C interface commands (supported by AQ4320)

	AQ4320				
Name	AQ4320 command	Range	Unit	Return value	Function
Command format setup	CFORM0 or ANDO				Accepts subsequent commands as ANDO's standard commands.
	CFORM1 or HP				Accepts subsequent commands as CFORM1 GPIB commands. The CFORM1 commands of Table 6-4 are accepted as CFORM1 commands.
	CFORM2 or PHOTO				Accepts subsequent commands as CFORM2 commands. The CFORM2 commands of Table 6-4 are accepted as CFORM2 commands.
Command format inquiry	CFORM?			ANDO CFORM1 CFORM2	Returns a command format.
Manufacturer name, product name, and serial No. inquiry	IDN? or *IDN?			ANDO-ELECTRIC/AQ4320 (*)/********/ Software version	Returns an ID. "(*)" can be "A" or "B" or "D". "********" is a serial number.
SQR mask setup (for GPIB interface only)	I*	0 to 255 (decimal)			0 for full mask, 1 to 255 for separate mask (The mask to BIT6 is invalid.)
SRQ mask inquiry (for GPIB interface only)	I?			0 to 255	Returns an SQR MASK value.
SRQ status byte request (for GPIB interface only)	SRQ?			0 to 255	Returns an SRQ status byte.
Inquiry of operation condition of SRQ0 (for GPIB interface only)	SRQ0?			1*	When optical output setting is completed
				*1	When wavelength setting is completed
Inquiry of operation condition of SRQ3 (for GPIB interface only)	SRQ3?			1****	When wavelength sweep ends
				*1***	When program ends
				1	Standby operation completion
				***1*	Initialization operation completion
				****1	Wavelength proofreading operation completion
Delimiter setup (for GPIB interface only)	DELIM*	0 1			Sets up a delimiter. 0:[EOI] 1:CR+LF+[EOI]

Artisan Scientific - Quality Instrumentation ... Guaranteed | (888) 88-SOURCE | www.artisan-scientific.com

Table 6-3 (2/10): GPIB and RS-232C interface commands (supported by AQ4320)

	AQ4320				
Name	AQ4320 command	Range	Unit	Return value	Function
Delimiter setup inquiry (for GPIB interface only)	DELIM?			0 1	Returns a delimiter. 0:[EOI] 1:CR+LF+[EOI]
Response setup (for GPIB interface only)	RESPON*	0 1 2			Sets a response. 0:NONE 1:CR 2:CR + >
Response setup inquiry	RESPON?			0 1 2	Returns a response. 0:NONE 1:CR 2:CR + >
Error number inquiry	ERROR?			E****	Returns an error number (see Table 5-3).
Initialize	INIT				Initializes the AQ4320.
Initialize status check	INIT?			0 1	0:Initialization has completed. 1:Initialization in progress
Reset of user condition	*RST	0			Returns to setting when the device is shipped in the factory.
Lock/unlock	LOCK*/<PASSWORD>	0 1			0:Unlocks (by up to four digits of password). 1:Locks.(The password can be omitted at the time of the LOCK ON).
Lock status check	LOCK?			0 1	0:Unlocked 1:Locked
Date setup	DATE****/**/**	YYYY/MM/DD			Enters current date in YYYY (year), MM (month) and DD (day) format.
Date inquiry	DATE?			YYYY/MM/DD	Returns the current calendar date.
Time setup	TIME**:**:**	HH:MM:SS			Enters the current time in HH (hour), MM (minutes) and SS (seconds) format.
Time inquiry	TIME?			HH:MM:SS	Returns the current clock time.
Date display format	DATEFORM*	0 1 2			0:"Y-M-D" format display 1:"M-D-Y" format display 2:"D-M-Y" format display Only the display of the main body is changed. (There is no influence in the return value of "DATE?".)
Date display format inquiry	DATEFORM?			0 1 2	0:"Y-M-D" format 1:"M-D-Y" format 2:"D-M-Y" format
Command delay time setup	WAIT*.*	0.1 to 1 (at 0.1 step)	sec		The next command is delayed for the specified time.

Artisan Scientific - Quality Instrumentation ... Guaranteed | (888) 88-SOURCE | www.artisan-scientific.com

Table 6-3 (3/10): GPIB and RS-232C interface commands (supported by AQ4320)

	AQ4320				
Name	AQ4320 command	Range	Unit	Return value	Function
User condition call	TUSERSET*	0 to 9			Calls the user setup conditions. "0" is the default setup.
User condition save	TUSERSAVE*	1 to 9			Saves the user conditions.
Echo back On (for RS-232C interface only)	ECHON				Echoes back an entry.
Echo back Off (for RS-232C interface only)	ECHOFF				Does not echoes back an entry.
Optical output On/Off setup	L*	0 1			0:Turns optical output Off. 1:Turns optical output On.
Optical output status inquiry	L?			0 1	0:Optical output is Off. 1:Optical output is On.
TLS module status inquiry	STANDBY? or STANBY?			0 1	0:Ready (End of standby) 1:Standby
Optical output check	TLIMIT?			0 1	0:Optical output of the wavelength is Within the assurance range. 1:Optical output of the wavelength is outside of assurance range.
Optical output setup (dBm)	TPDB±**.*	-20.0 to +10.0	dBm		Sets the optical output to the specified level. Refer to Table 5-1 Optical output range set (dBm)
Optical output inquiry (dBm)	TPDB?	-20.0 to +10.0	dBm	±**.*	Returns the optical output set value in dBm.
Optical output setup (mW)	TPMW**.***	0.01 to 10.000	mW		Sets the optical output to the specified level. Refer to Table 5-1 Optical output range set (mW)
Optical output inquiry	TPMW?	0.01 to 10.000	mW	**.***	Returns the optical output set value in mW.
Current optical output inquiry	TP?		dBm	±**.*	Returns the current optical output value. It varies depending on the selected unit.
			mW	**.***	
Wavelength setup	TWL****.***	1480.000 to 1580.000	nm		Uses the specified wavelength for oscillation. Refer to Table 5-1 Wavelength range set
Wavelength inquiry	TWL?	1480.000 to 1580.000	nm	****.***	Returns the oscillation wavelength.
Optical frequency setup	TFR***.****	189.7421 to 202.5625	THz		Uses the specified frequency for optical oscillation. Refer to Table 5-1 Optical frequency range set
Optical frequency inquiry	TFR?	189.7421 to 202.5625	THz	***.****	Returns the oscillation frequency.

Artisan Scientific - Quality Instrumentation ... Guaranteed | (888) 88-SOURCE | www.artisan-scientific.com

Table 6-3 (4/10): GPIB and RS-232C interface commands (supported by AQ4320)

	AQ4320				
Name	AQ4320 command	Range	Unit	Return value	Function
Optical wavelength and frequency unit switchover	TWLFRU*	0 1			0:Displays the optical wavelength (or frequency) in nanometers (nm). 1:Displays the optical wavelength (or frequency) in THz.
Step wavelength and frequency unit switchover	TSTEPU*	0 1			0:Displays the step wavelength (or frequency) in nm. 1:Displays the step wavelength (or frequency) in THz.
Optical output unit switchover	TPOU*	0 1			0:Displays the optical output in dBm. 1:Displays the optical output in mW.
Wavelength /frequency and optical output inquiry	TUNIT?			****0	WL FREQ nm
				****1	WL FREQ THz
				***0*	STEP nm
				***1*	STEP GHz
				0	POWER dBm
				1	POWER mW
				*0***	BASE UNIT nm
				*1***	BASE UNIT THz
				0****	OFFSET UNIT nm
				1****	OFFSET UNIT THz
Max wavelength inquiry	WLMAX?		nm	****.***	Returns the maximum wavelength that you can set.
Min wavelength inquiry	WLMIN?		nm	****.***	Returns the minimum wavelength that you can set.
Max optical frequency inquiry (THz)	FRMAX?		THz	***.****	Returns the maximum optical frequency that you can set.
Min optical frequency inquiry (THz)	FRMIN?		THz	***.****	Returns the minimum optical frequency that you can set.
Max optical output dBm inquiry	PDBMAX?		dBm	±**.*	Returns the maximum optical output (in dBm) that you can set.
Max optical output mW inquiry	PMWMAX?		mW	**.***	Returns the maximum optical output (in mW) that you can set.
Min optical output dBm inquiry	PDBMIN?		dBm	±**.*	Returns the minimum optical output (in dBm) that you can set.
Min optical output mW inquiry	PMWMIN?		mW	**.***	Returns the minimum optical output (in mW) that you can set.
Start repeat sweep	TRET				Starts to sweep the repeated wavelength. (Note 1)

Artisan Scientific - Quality Instrumentation ... Guaranteed | (888) 88-SOURCE | www.artisan-scientific.com

Table 6-3 (5/10): GPIB and RS-232C interface commands (supported by AQ4320)

	AQ4320				
Name	AQ4320 command	Range	Unit	Return value	Function
Start single sweep	TSGL				Starts a single wavelength sweep. (Note 1)
Step movement of wavelength	TWLUP				Moves by the unit of the step wavelength to which the wavelength is set with sweep.
Stop sweep	TSTP				Stops wavelength sweep.
Pause sweep	TPAS				Temporarily pauses the wavelength sweep.
Continue sweep	TCONT				Restart wavelength sweep.
Start trigger sweep	TRIG				Sweeps a single step of optical wavelength and frequency specified by the "TSTEW+***.***" or "TSTEFR-*****.*" command.
Sweep mode selection	TSWM*	0 1 2			0:Selects the step sweep mode of wavelength. 1:Selects the continuous sweep mode of wavelength. 2:Selects the trigger sweep mode of wavelength.
Sweep mode inquiry	TSWM?			0 1 2	Returns the sweep mode. 0:Selects the step sweep mode of wavelength. 1:Selects the continuous sweep mode of wavelength. 2:Selects the trigger sweep mode of wavelength.
Weep condition inquiry	TSWEEP?			**0	Stops or pauses sweep.
				**1	Single sweep in progress
				**2	Repeated sweep in progress
				0	Step sweep mode
				1	Continuous sweep mode
				2	Trigger mode
				0**	Constant calibration Off
				1**	Constant calibration On
Uses the specified wavelength to start sweep.	TSTAWL****.***	1480.000 to 1580.000 at 0.001 step	nm		Uses the specified wavelength to start sweep. Refer to Table 5-1 Starting sweeping the wavelength set
Sweep start wavelength inquiry	TSTAWL?		nm	****.***	Returns the sweep start wavelength.
Sweep stop wavelength setup	TSTPWL****.***	1480.000 to 1580.000 at 0.001 step	nm		Uses the specified wavelength to stop sweep. Refer to Table 5-1 Stopping sweeping the wavelength set

Artisan Scientific - Quality Instrumentation ... Guaranteed | (888) 88-SOURCE | www.artisan-scientific.com

Table 6-3 (6/10): GPIB and RS-232C interface commands (supported by AQ4320)

	AQ4320				
Name	AQ4320 command	Range	Unit	Return value	Function
Sweep stop wavelength inquiry	TSTPWL?		nm	****.***	Returns the sweep stop wavelength.
Sweep wavelength step setup	TSTEWL***.***	0.001 to 100.000 at 0.001 step	nm		Sets the sweep wavelength step for Step or Trigger sweep mode. Refer to Table 5-1 Interval for sweeping the wavelength set
Sweep wavelength step inquiry	TSTEWL?		nm	***.***	Returns the sweep wavelength step.
Sweep start frequency setup	TSTAFR***.****	189.7421 to 202.5625 at 0.001 step	THz		Uses the specified frequency to start sweep. Refer to Table 5-1 Starting sweeping the optical frequency set
Sweep start frequency inquir	TSTAFR?		THz	***.****	Returns the sweep start optical frequency.
Sweep stop frequency setup	TSTPFR***.****	189.7421 to 202.5625 at 0.001 step	THz		Uses the specified frequency to stop sweep. Refer to Table 5-1 Stopping sweeping the optical frequency set
Sweep stop frequency inquiry	TSTPFR?		THz	***.****	Returns the sweep stop frequency of sweep mode.
Sweep frequency step setup	TSTEFR-*****.*	-12820.4 to -0.2 at 0.2 step	GHz		Sets the sweep frequency interval in Step sweep mode. The Step sweep mode frequency is returned. Refer to Table 5-1 Interval for sweeping the optical frequency set
Sweep frequency step inquiry	TSTEFR?		GHz	-*****.*	Returns the step frequency of sweep mode.
Sweep step time setup	TSTET***.*	0.1 to 999.0	sec		Sets the sweep stop time in Step sweep mode.
Sweep step time inquiry	TSTET?		sec	***.*	Returns the step time of sweep mode.
Sweep time setup	TSWET*****.*	1.0 to 99999.0	sec		Sets the sweep time in Continuous sweep mode.
Sweep time inquiry	TSWET?		sec	*****.*	Returns the sweep time in Continuous sweep mode.
Sweep stop time setup	TSWEINT*****	0 to 99999	sec		Sets the stop time after each sweep.

Artisan Scientific - Quality Instrumentation ... Guaranteed | (888) 88-SOURCE | www.artisan-scientific.com

Table 6-3 (7/10): GPIB and RS-232C interface commands (supported by AQ4320)

	AQ4320				
Name	AQ4320 command	Range	Unit	Return value	Function
Sweep stop time inquiry	TSWEINT?		sec	*****	Returns the stop time after each sweep.
Reference wavelength setup	TBASEWL****.***	1480.000 to 1580.000 at 0.001 step	nm		Uses the specified wavelength as the reference wavelength in offset mode. Refer to Table 5-1 Base wavelength set
Reference wavelength inquiry	TBASEWL?	1480.000 to 1580.000 at 0.001 step	nm	****.***	Returns the reference wavelength in offset mode.
Offset wavelength setup	TOFSTWL±***.***	-100.000 to +100.000	nm		Uses the specified wavelength as the offset wavelength in offset mode. Refer to Table 5-1 Offset wavelength set
Offset wavelength inquiry	TOFSTWL?	-100.000 to +100.000	nm	±***.***	Returns the offset wavelength in offset mode.
Reference frequency setup	TBASEFR***.****	189.7421 to 202.5625 at 0.0001 step	THz		Uses the specified frequency for reference in offset mode. Refer to Table 5-1 Base optical frequency set
Reference Frequency inquiry	TBASEFR?	189.7421 to 202.5625 at 0.0001 step	THz	***.****	Returns the reference frequency in offset mode.
Offset frequency setup	TOFSTFR±*****.*	-12820.4 to +12820.4	GHz		Uses the specified frequency as the offset frequency in offset mode. Refer to Table 5-1 Offset optical frequency set
Offset frequency inquiry	TOFSTFR?	-12820.4 to +12820.4	GHz	±*****.*	Returns the offset frequency in offset mode.
Reference /frequency display unit setup	TBASU*	0 1			0:Displays the reference wavelength or frequency in "nm" in offset mode. 1:Displays the reference wavelength or frequency in THz in offset mode.
Offset /frequency display unit setup	TOFSTU*	0 1			0:Displays the offset wavelength or frequency in "nm" in offset mode. 1:Displays the offset wavelength or frequency in THz in offset mode.

Artisan Scientific - Quality Instrumentation ... Guaranteed | (888) 88-SOURCE | www.artisan-scientific.com

Table 6-3 (8/10): GPIB and RS-232C interface commands (supported by AQ4320)

	AQ4320				
Name	AQ4320 command	Range	Unit	Return value	Function
Wavelength /frequency display unit setup	TWLFRU*	0 1			0:Displays the wavelength or frequency in "nm". 1:Displays the wavelength or frequency in THz.
Ref., offset, and wavelength /frequency unit inquiry	TOFSU?			*0	Reference unit nm
				*1	Reference unit THz
				0*	Offset unit nm
				1*	Offset unit GHz
Reference Wavelength /frequency setup	TCURBAS				Sets the current wavelength (or frequency) as the reference one.
Linewidth setup	TLINEWIDTH*	0 1			Sets the spectrum linewidth. 0:Narrow 1:Wide
Linewidth inquiry	TLINEWIDTH?			0 1	0:Narrow 1:Wide
CW/CHOP setup	TCHOP*	0 1 2			0:CW 1:Internal CHOP 2:External CHOP
CW/CHOP inquiry	TCHOP?			0 1 2	0:CW 1:Internal CHOP 2:External CHOP
Internal CHOP frequency setup	TCHOPFREQ***.**	0.20 to 300.00 at 0.01 step	kHz		Sets an internal CHOP frequency. Refer to Table 5-1 internal chop frequency set
Internal CHOP frequency inquiry	TCHOPFREQ?		kHz	***.**	Returns the CHOP frequency.
Constant calibration on/off switching	TCCAL*	0 1			0:Does not always calibrate the wavelength. 1:Always calibrate the wavelength.
Calibration interval setup	TCALINT****	10 to 9999 at 1 step	min		Sets the wavelength calibration interval time.
Calibration interval inquiry	TCALINT?			****	Returns the calibration interval time.
Constant calibration on/off inquiry	TCCAL?			0 1	0:Does not always calibrate the wavelength. 1:Always calibrate the wavelength.
Wavelength calibration	TWCAL				Starts wavelength calibration.
Calibration discontinuance	TWCALCL				The calibration is discontinued.

Artisan Scientific - Quality Instrumentation ... Guaranteed | (888) 88-SOURCE | www.artisan-scientific.com

Table 6-3 (9/10): GPIB and RS-232C interface commands (supported by AQ4320)

	AQ4320				
Name	AQ4320 command	Range	Unit	Return value	Function
Calibrated inquiry	WLCAL?			0 1 2	0:Calibration failure 1:Calibration success 2:Calibrating.
Auto calibration setup	AUTOCAL*	0 1			0:Auto calibration Off 1:Auto calibration On
Auto calibration inquiry	AUTOCAL?			0 1	0:Auto calibration Off 1:Auto calibration On
Wavelength accuracy setup	SWNF*	0 1			0:NORMAL 1:FINE
Wavelength accuracy inquiry	SWNF?			0 1	0:NORMAL 1:FINE
Wavelength settling function setup	MWMCAL*	0 1			The wavelength is settled to the set wavelength by using the host computer and the wave length meter. 0:Wavelength settling function Off 1:Wavelength settling function On
Wavelength settling function inquiry	MWMCAL?			0 1	0:Wavelength settling function Off 1:Wavelength settling function On
Sending of wavelength meter value	MWM****.***	1480.000 to 1580.000	nm		The value of the wavelength meter is passed to AQ4320.
Width of wavelength settling setup	MWMRANGE**	0 to 10	pm		The width of settling from the set wavelength of AQ4320 is set. Default is 3 (pm).
Amount of wavelength shift setup	TWLSHIFT***	-200 to 200 STEP 1	pm		The wavelength actual only as for wavelength's worth specified for a present wavelength set value is shifted.
Amount of wavelength shift inquiry	TWLSHIFT?		pm	***	The value of the amount of the wavelength shift is returned.
The maximum optical output trace function setup	TPOTR*	0 1			The maximum, optical output value in the wavelength set when the wavelength is changed is output. The error occurs if an optical output is set when this function is turned on. 0:The maximum optical output trace function Off 1:The maximum optical output trace function On
The maximum optical output trace function inquiry	TPOTR?			0 1	0:The maximum optical output trace function Off 1:The maximum optical output trace function On

Artisan Scientific - Quality Instrumentation ... Guaranteed | (888) 88-SOURCE | www.artisan-scientific.com

Table 6-3 (10/10): GPIB and RS-232C interface commands (supported by AQ4320)

	AQ4320				
Name	AQ4320 command	Range	Unit	Return value	Function
Loading of program	PRGLOAD*				LOAD does PROGRAM No *.
Execution of program	PRGRUN				PROGRAM is executed.
Stop of program	PRGSTOP				PROGRAM is stopped.
Restart of program	PRGRESTA				PROGRAM is restarted.

(Note 1) The commands other than a sweep stop and a temporary sweep stop cannot respond while the sweep of the wave length is operating. Send other commands after ending the sweep operation.

Artisan Scientific - Quality Instrumentation ... Guaranteed | (888) 88-SOURCE | www.artisan-scientific.com

6.1.4 Notes in CFORM1

- The command input with CFORM1 is translated into the ANDO command and is executed. Table 6-4 shows the translation table of the CFORM1 command and the ANDO command.

- Please input the format of LOCK, TIME, and DATE by the same delimitation character as the format of ANDO.

  Format of LOCK LOCK*/<PASSWORD>
  Format of TIME TIME**:**:**
  Format of DATE DATE****/**/**

- Please receive the data of the controller side to IDN? with LINE INPUT.

- The unit is correspondence only of W, Hz, and m.

- In the input value, only the numerical value is correspondence.

- It is non-correspondence to SRQ.(Same SRQ as SRQ in the ANDO command is sent)

- *WAI waits for the command at 0.1 seconds.

- About the command concerning an optical modulation
  Note becoming to following operations concerning an optical modulation.

CFORM1 COMMAND	ANDO COMMAND	
[:SOURCE:AM:STATE 0]	[TLINEWIDTH 0],[TCHOP 0]	
[:SOURCE:AM:STATE 1]	[TCHOP 1]	
[:SOURCE:AM:SOURCE 0]	[TCHOP 1]	:SOURCE:AM:STATE is effective and only the time of one is effective.
[:SOURCE:AM:SOURCE 1]	[TLINEWIDTH 1]	:SOURCE:AM:STATE is effective and only the time of one is effective.
[:SOURCE:AM:SOURCE 2]	[TCHOP 2]	:SOURCE:AM:STATE is effective and only the time of one is effective.

HP COMMAND	ANDO return value
[:SOURCE:AM:STATE ?]	0 when AQ4320 is NARROW in CW 1 when AQ4320 is INT CHOP and EXT CHOP or WIDE
[:SOURCE:AM:SOURCE ?]	0 when AQ4320 is INT CHOP 1 when AQ4320 is WIDE 2 when AQ4320 is EXT CHOP 0 when AQ4320 is CW and NARROW

Attention
The modulation of the source of light is preserved when changing with ANDO COMMAND in the state of the modulation of the source of light and changing to the HP mode. It is likely not to become an accurate return value for the question to the state of the modulation of the source of light.
The state of the modulation is recommended to be set again after the state of the source of light is made "CW&NARROW" by the [:SOURCE:AM:STATE OFF] command once a use in the HP mode.
Note that it is sure to become set of TCHOP 1 at the command of [:SOURCE:AM:STATE OFF] if the command of [:SOURCE:AM:STATE ON] is done.

Artisan Scientific - Quality Instrumentation ... Guaranteed | (888) 88-SOURCE | www.artisan-scientific.com

Table 6-4 (1/2): GPIB and RS-232C interface commands
(Comparison with competitor's commands CFORM1)

CFORM1(HP) command	Function	Translation command	Note
CFORM0	Setting of command format	CFORM0	
ANDO	Setting of command format	ANDO	
CFORM1	Setting of command format	CFORM1	
HP	Setting of command format	HP	
CFORM2	Setting of command format	CFORM2	
PHOTO	Setting of command format	PHOTO	
CFORM?	Inquiry of command format	CFORM?	
*IDN?	Inquiry of name of the company, equipment name, and cereal No.	IDN?	
:SOURCE:POWER:LEVEL :IMMEDIATE:AMPLITUDE	Optical output setting (dBm) (mW)	TPDB or TPMW	
:SOURCE:POWER:LEVEL :IMMEDIATE:AMPLITUDE?	Inquiry of present optical output value	TP?	
:SOURCE:POWER:UNIT	Switch at each display of optical output	TPOU	
:SOURCE:POWER:UNIT?	Inquiry at each display of wavelength/ optical frequency	TUNIT?	
:SOURCE:WAVELENGTH :REFERENCE:DISPLAY	Setting of wavelength/present optical frequency to standard	TCURBAS	
:SOURCE:WAVELENGTH :REFERENCE?	Inquiry of standard wavelength	TBASEWL?	
:SOURCE:WAVELENGTH :FREQUENCY	Setting of offset light frequency	TOFSTFR	
:SOURCE:WAVELENGTH :FREQUENCY?	Inquiry of offset light frequency	TOFSTFR?	
:SOURCE:WAVELENGTH :CW/FIXED	Setting of wavelength	TWL	
:SOURCE:WAVELENGTH :CW/FIXED?	Inquiry of wavelength setting	TWL?	
:SOURCE:AM:INTERNAL :FREQUENCY	Setting of frequency of internal chop	TCHOPFREQ	
:SOURCE:AM:INTERNAL :FREQUENCY?	Inquiry of frequency of internal chop	TCHOPFREQ?	
:SOURCE:AM:SOURCE	Setting of CW/CHOP	TCHOP	
:SOURCE:AM:SOURCE?	Inquiry of CW/CHOP	TCHOP?	
:SOURCE:AM:STATE	Setting of modulation	TCHOP	
:SOURCE:AM:STATE?	Inquiry of modulation	TCHOP?	
:STATUS:QUESTIONABLE :NTRANSTION?	Inquiry of QUES:NTR register	L? & STANBY?	
:STATUS:QUESTIONABLE :PTRANSTION?	Inquiry of QUES:PTR register	L? & STANBY?	
:STATUS:QUESTIONABLE :CONDITION?	Inquiry of optical output/state of TLS module	L? & STANBY?	STANBY?:BIT9 L?:BIT10
:STATUS:QUESTIONABLE :EVENT?	Inquiry of QUES:EVEN register	L? & STANBY?	

Artisan Scientific - Quality Instrumentation ... Guaranteed | (888) 88-SOURCE | www.artisan-scientific.com

Table 6-4 (2/2): GPIB and RS-232C interface commands
(Comparison with competitor's commands CFORM1)

CFORM1(HP) command	Function	Translation command	Note
:STATUS:OPERATION :NTRANSITION?	Inquiry of NTR register	TLIMIT? & INIT?	
:STATUS:OPERATION :PTRANSITION?	Inquiry of PTR register	TLIMIT? & INIT?	
:STATUS:OPERATION :CONDITION?	Initialized confirmation	TLIMIT? or INIT?	TLIMIT?:BIT8 INIT?:BIT9
:STATUS:OPERATION :EVENT?	Inquiry of OPER:EVEN register	TLIMIT? or INIT?	
:OUTPUT:STATE	Optical output ON/OFF	L	
:OUTPUT:STATE?	Inquiry by which light is output	L?	
:SYSTEM:DATE	Setting of date	DATE	
:SYSTEM:DATE?	Inquiry of date	DATE?	
:SYSTEM:TIME	Setting of time	TIME	
:SYSTEM:TIME?	Inquiry of time	TIME?	
:SYSTEM:ERROR?	Inquiry of error No.	ERROR?	
:LOCK	Lock execution/release	LOCK	
:LOCK?	Locked confirmation	LOCK?	
*SRE	Setting of the SRQ mask (Only GP-IB).	I	
*SRE?	The inquiry of the SRQ mask (Only GP-IB).	I?	
*STB?	The demand of the SRQ status byte (Only GP-IB).	SRQ?	
*RCL	Call of user condition	TUSERSET	
*RST	Reset of user condition	TUSERSET	
*SAV	Preservation of user condition	TUSERSAVE	
*WAI	Setting at delay time of command	WAIT	

Artisan Scientific - Quality Instrumentation ... Guaranteed | (888) 88-SOURCE | www.artisan-scientific.com

Table 6-5 (1/2): Command that is not supported by CFORM1 in AQ4320

COMMON COMMAND	
Function	COMMAND
error line,ESR,STB clear	*CLS
status registration mask set	*ESE
status registration mask check	*ESE?
status registration check	*ESR?
individual information check	*IDN?
*OPC?COMMAND is made effective	*OPC
whether the operation immediately before is completed is confirmed	*OPC?
option check	*OPT?
test	*TST?

DISPLAY COMMAND	
DISPLAY ON/OFF	:DISPLAY:ENABLE
DISPLAY SETTING?	:DISPLAY:ENABLE?

SOURCE COMMAND	
MOD ALL TIME ON/OFF	:SOURCE:MODOUT
MOD ALL TIME SETTING?	:SOURCE:MODOUT?
ATTENUATION LEVEL SET	:SOURCE:POWER:ATTENUATION
ATTENUATION LEVEL SETTING?	:SOURCE:POWER:ATTENUATION?
ATTENUATION AUTO	:SOURCE:POWER:ATTENUATION:AUTO
ATTENUATION AUTO?	:SOURCE:POWER:ATTENUATION:AUTO?
ATTENUATION DARK	:SOURCE:POWER:ATTENUATION:DARK
ATTENUATION DARUK?	:SOURCE:POWER:ATTENUATION:DARK?

Artisan Scientific - Quality Instrumentation ... Guaranteed | (888) 88-SOURCE | www.artisan-scientific.com

Table 6-5 (2/2): Command that is not supported by CFORM1 in AQ4320

STATUS COMMAND	
Function	COMMAND
set OPERATION in STB	:STATUS:OPERATION:ENABLE
OPER ENAB registration ENABLE?	:STATUS:OPERATION:ENABLE?
set to NTR registration?	:STATUS:OPERATION:NTRANSITION
NTR registration read	:STATUS:OPERATION:NTRANSITION?
set to PTR registration	:STATUS:OPERATION:PTRANSITION
QUES:COND(BIT7) read	:STATUS:QUESTIONABLE:CONDITION?(BIT7)
QUES:COND:ENAB registration set	:STATUS:QUESTIONABLE:ENABLE
QUES:COND:ENAB registration read	:STATUS:QUESTIONABLE:ENABLE?
QUES:EVENT read:QUES:EVENT read	:STATUS:QUESTIONABLE:EVENT?
QUES:NTR registration set	:STATUS:QUESTIONABLE:NTRANSITION
QUES:NTR registration read	:STATUS:QUESTIONABLE:NTRANSITION?
QUES:PTR registration set	:STATUS:QUESTIONABLE:PTRANSITON
QUES:PTR registration read	:STATUS:QUESTIONABLE:PTRANSITON?
ENAB,TRANSITON registration preset	:STATUS:PRESET

TRACE COMMAND	
Function	COMMAND
return TRACE list?	:TRACE:CATALOG?
return TRACE point number?	:TRACE:POINTS?
return TRACE data?	:TRACE:DATA?

Artisan Scientific - Quality Instrumentation ... Guaranteed | (888) 88-SOURCE | www.artisan-scientific.com

6.1.5 Notes in CFORM2

- It is non-correspondence to SRQ.
  (Same SRQ as SRQ in the ANDO command is sent)

- The command input with CFORM1 is translated into the ANDO command and is executed.
  Table 6-4 shows the translation table of the CFORM1 command and the ANDO command.

Artisan Scientific - Quality Instrumentation ... Guaranteed | (888) 88-SOURCE | www.artisan-scientific.com

Table 6-6 : GPIB and RS-232C interface commands
(Comparison with competitor's commands CFORM2)

CFORM2(PHOTO) command	Function	Translation command	Note
CFORM0	Setting of command format	CFORM0	
ANDO	Setting of command format	ANDO	
CFORM1	Setting of command format	CFORM1	
HP	Setting of command format	HP	
CFORM2	Setting of command format	CFORM2	
PHOTO	Setting of command format	PHOTO	
CFORM?	Inquiry of command format	CFORM?	
DISABLE	Optical output OFF	L0	
ENABLE	Optical output ON	L1	
ECHOFF	Echo back OFF (Only RS-232C).	ECHOFF	
ECHON	Echo back ON (Only RS-232C).	ECHON	
smin=	Setting of sweep beginning wavelength	TSTAWL	
smax=	Setting of sweep stop wavelength	TSTPWL	
step=	Setting of sweep step wavelengt	TSTEWL	
Stime=	Setting of sweep step time	TSTET	
SCAN	sweep beginning once	TSGL	
STOP	sweep stop	TSTP	
INIT	Initialization execution	INIT	
P=+	Optical output value setting (dBm).	TPDB	
P=-	Optical output value setting (dBm).	TPDB	
P=	Setting of optical output APC operates. An optical output is set in the input value.	TPMW	
P?	Inquiry of present optical output value.	L? & TP?	
DBM	The display and the input value of POWER are made dBm.	TPOU0	
MW	The display and the input value of POWER are made mW.	TPOU1	
L=	Setting of wavelength	TWL	
L?	Inquiry of present wavelength	TWL?	
f=	Setting of optical frequency	TFR	
f?	Inquiry of present frequency	TFR?	

Artisan Scientific - Quality Instrumentation ... Guaranteed | (888) 88-SOURCE | www.artisan-scientific.com

Table 6-7 : Command that is not supported by CFORM2 in AQ4320

Function	COMMAND
ACC(AUTO CURRENT CONTROL) operates.	APCOFF
APC(AUTO POWER CONTROL) operates.	APCON
Setting of driving current value ACC operates. The current value is set.	I=
It is an inquiry of a present operation current value.	I?

Artisan Scientific - Quality Instrumentation ... Guaranteed | (888) 88-SOURCE | www.artisan-scientific.com

6.2 RS-232C Interface Control

Caution

Always turn OFF the [POWER] switch [■ OFF] before connecting or disconnecting the RS-232C interface cable to/from the AQ4320. Also, use an RS-232C interface cross cable.

Caution

The AQ4320 does not accept any RS-232C command immediately after its power-on but before password input.

6.2.1 RS-232C interface commands

Table 6-3 lists the RS-232C interface commands supported by the AQ4320, and Table 6-4,6-6 gives the compatibility with competitive products.

6.2.2 Explanation of basic functions

(1) You can set the communication interfacing conditions by following the instructions of Paragraph 4-1 of Section 5.4.6 to Paragraph 4-6 of Section 5.4.6. Table 6-6 lists the initial values.

Table 6-6: Initial values for RS-232C interface communication

Item	Initial value
Baud rate	9600 bps
Data bit	8 bits
Parity	Non-parity
Stop bit	1
Flow control	No
Response	No

(2) Send and receive buffers

The AQ4320 has the 128-byte (including comma characters) send/receive buffers.

Artisan Scientific - Quality Instrumentation ... Guaranteed | (888) 88-SOURCE | www.artisan-scientific.com

(3) Response

Table 6-7 defines the RS-232C interface response of the AQ4320.

Table 6-7: RS-232C interface response

Response	Conditions
OK (*)	Normal process termination
COMMAND ERROR (*)	Command error
VALUE ERROR (*)	Numerical value input error
SWEEP START (*)	When sweep starts
SWEEP STOP (*)	When sweep ends

An asterisk (*) may be a "CR" or a combination of "CR" and ">". They can be set in Remote or Manual operation mode (see Paragraph 4-6 of Section 5.4.7).

Artisan Scientific - Quality Instrumentation ... Guaranteed | (888) 88-SOURCE | www.artisan-scientific.com

6.3 Sample Programs

This section gives sample GPIB interface control programs.

This program sets the sweep conditions and sweeps a single time by using the Hewlett Packard's 9816S controller.

```
10  ABORT 7                              ! INTERFACE CLEAR
20  ADD = 724                            ! GP-IB ADDRESS=24
30  OUTPUT ADD : "ANDO"                  ! COMMAND FROM=ANDO
40  OUTPUT ADD : "IO"                    ! SRQ FULL MASK
50  OUTPUT ADD : "TPDB-3"                ! OUTPUT POWER=-3dBm
60  OUTPUT ADD : "TSTAWL 1500.000"       ! SWEEP START WAVELENGTH=1500.000nm
70  OUTPUT ADD : "TSTPW 1560.000"        ! SWEEP END WAVELENGTH=1560.000nm
80  OUTPUT ADD : "TSTEWL 5"              ! STEP WAVELENGTH=5nm
90  OUTPUT ADD : "TSTET 1"               ! STEP TIME=1sec
100 OUTPUT ADD : "TSGL"                  ! SINGLE SWEEP START
110 END
```


Artisan Scientific - Quality Instrumentation ... Guaranteed | (888) 88-SOURCE | www.artisan-scientific.com

Chapter 7 System Circuits and Structure

This chapter describes the basic AQ4320 system circuits and structure.

7.1 System Circuits

Fig. 7-1 shows the AQ4320 system block diagram.

(1) LD module section

Consists of an LD, monitor PD, Peltier effect elements, thermistors, motors and optical devices such as diffraction effect elements. The optical emission is sent to the optical output section.

(2) Gas cell module section

Consists of the gas cell having the absorption characteristics of specific wavelength only, photodiodes and others. The reference wavelength is determined based on the gas cell characteristics.

(3) LD driver section

Drives the LD unit and controls the LD module temperature. The driver is under CPU1 control.

(4) Controllers

The CPU2 controls the motors of LD module section, searches the wavelength of the gas cell module wavelength absorption, and uses it as the reference wavelength.

The CPU3 controls the RS-232C and GPIB interface sections.

Artisan Scientific - Quality Instrumentation ... Guaranteed | (888) 88-SOURCE | www.artisan-scientific.com

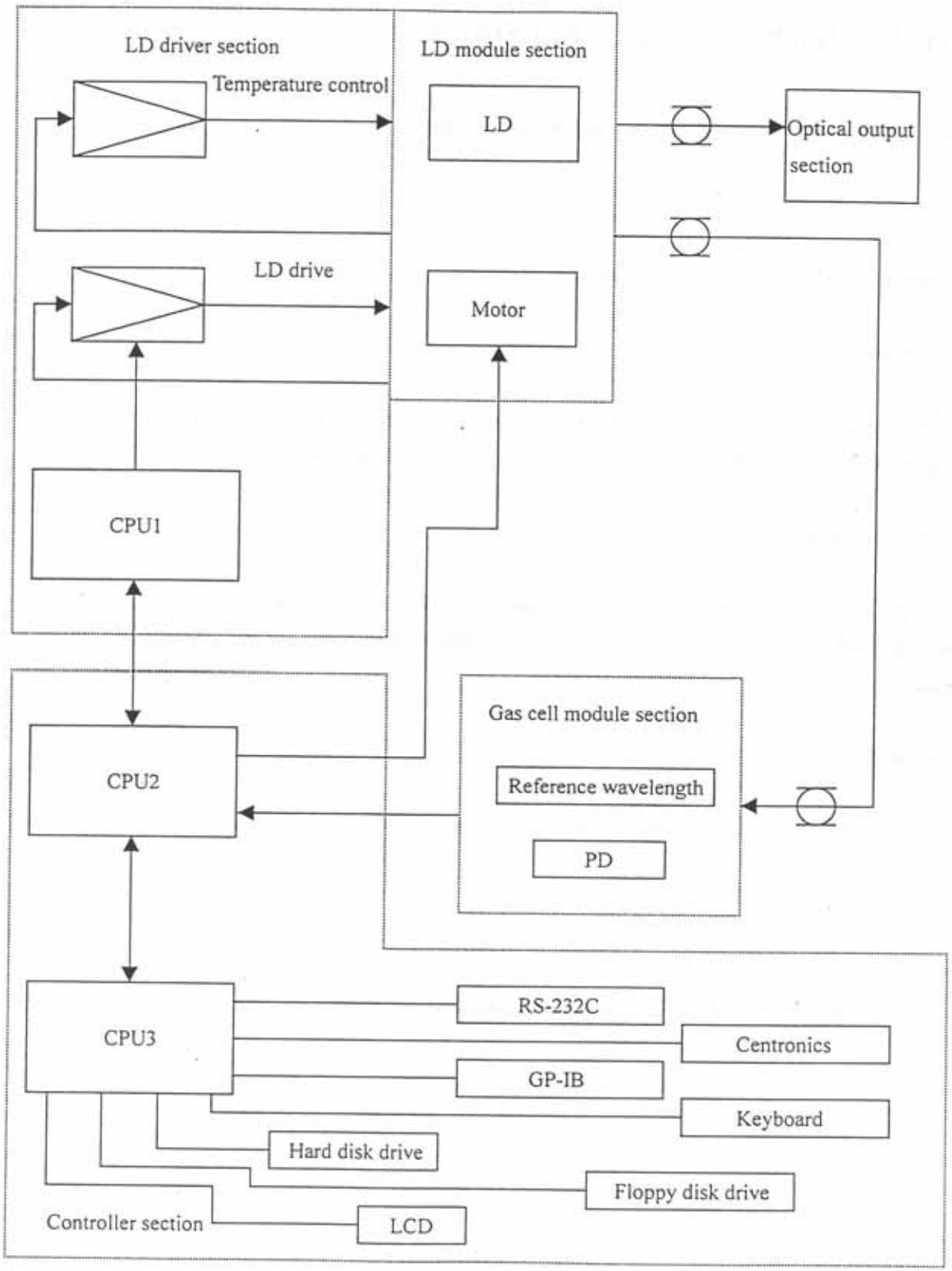

Fig. 7-1: System block diagram

Artisan Scientific - Quality Instrumentation ... Guaranteed | (888) 88-SOURCE | www.artisan-scientific.com

7.2 Structure

Chart ASD-62517-1 shows an AQ4320A system appearance. The AQ4320B/D have the same appearance although their model names differ from the AQ4320A.

Artisan Scientific - Quality Instrumentation ... Guaranteed | (888) 88-SOURCE | www.artisan-scientific.com

Chapter 8 Operation Principle

8.1 Variable Wavelength Measurement

The AQ4320A/B/D system uses an external resonator as shown in Fig. 8-1. This structure can minimize the mode hop generation but provide the better wavelength selection.

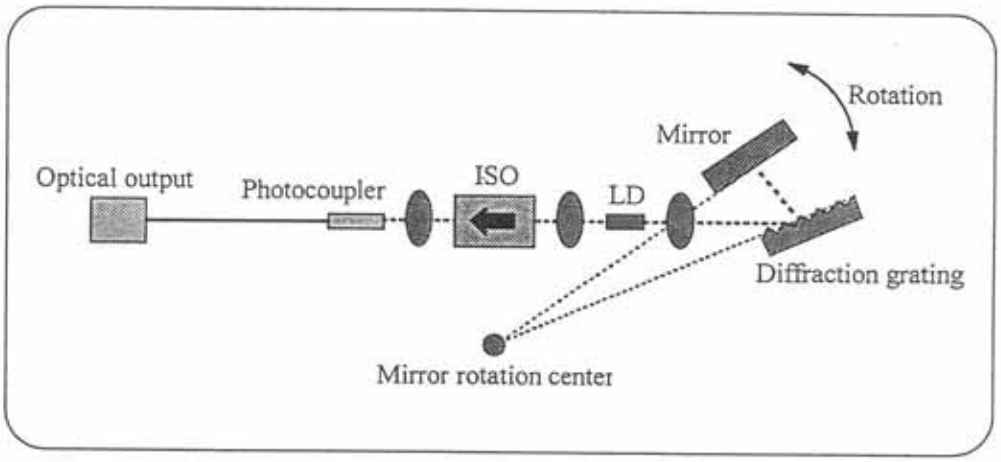

Fig. 8-1: External resonator structure

・Mode hop of variable wavelength source

When the wavelength of variable wavelength source is changed, the vertical mode signals of external resonator may not synchronize with the selection wavelength of diffraction grating and a mode hop of wavelength may occur. However, the external resonator design of Fig. 8-1 can minimize the mode hop generation as it changes the selection wavelength of diffraction grating in synchronous with vertical mode signals of external resonator as shown in Fig. 8-2.

Artisan Scientific - Quality Instrumentation ... Guaranteed | (888) 88-SOURCE | www.artisan-scientific.com

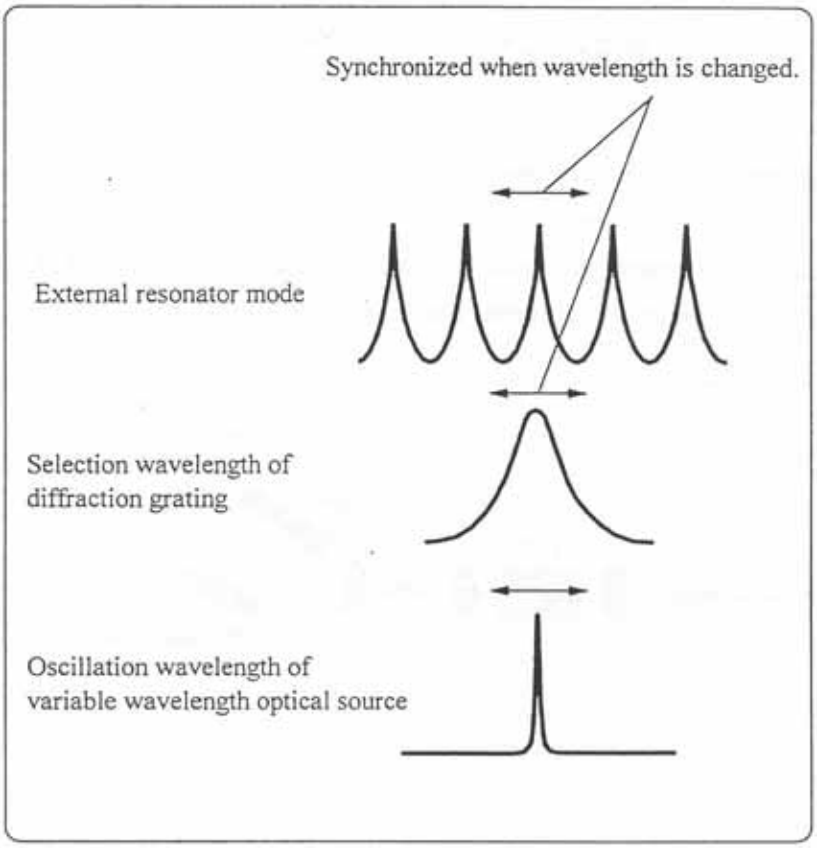

Fig. 8-2: Vertical mode signals of external resonator

8.2 Reference Wavelength

The AQ4320 has a built-in acetylene gas module and can determine its reference wavelength using absorption lines of acetylene gas. When the optical wavelength is changed in the analyzer, the level of optical signals passing through the acetylene gas is detected and the reference wavelength is determined.

Artisan Scientific - Quality Instrumentation ... Guaranteed | (888) 88-SOURCE | www.artisan-scientific.com

8.3 About the optical output control of AQ4320

AQ4320A is set to become following optical outputs.

When you set MANUAL MENU and GPIB

(ex. maximum optical output 8dBm)

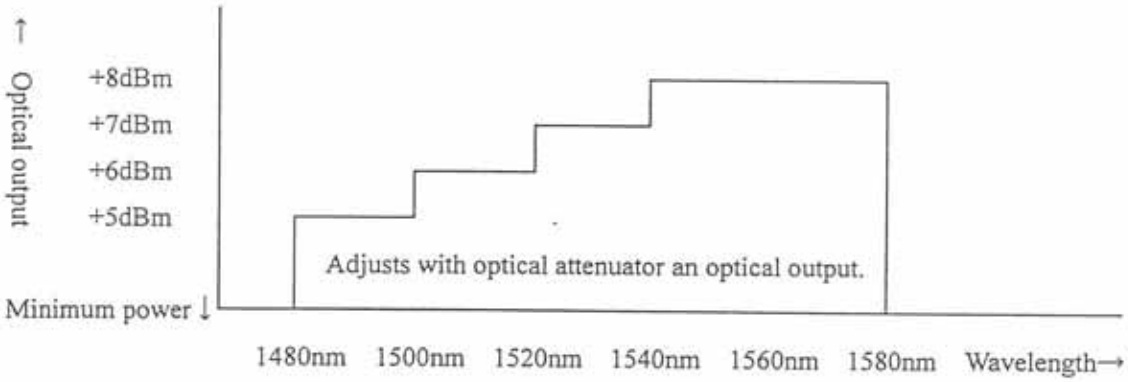

SWEEP MENU

(ex. maximum optical output 8dBm)

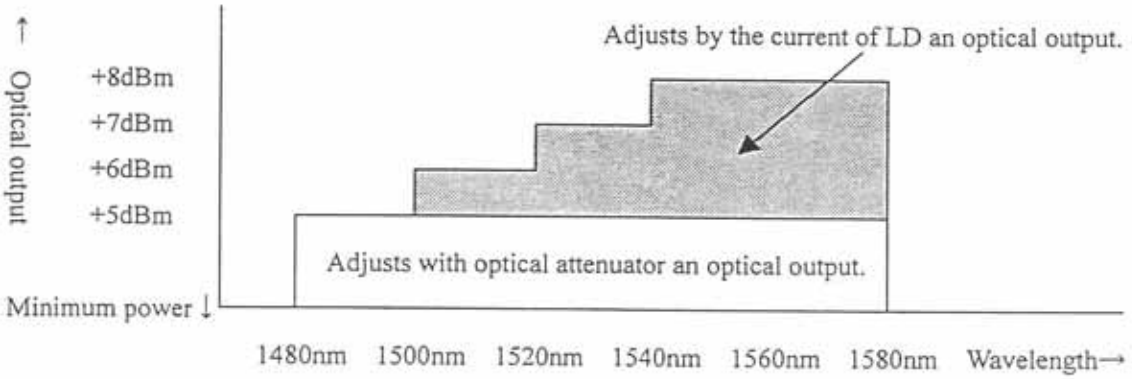

The purpose of the reason to control like this is to hasten the speed of SWEEP in case of the purpose is to improve the smoothness degree of an optical output at SWEEP.

*As for AQ4320B/D, AQ4320A, an optical output, and the wavelength are different. However, AQ4320B/D becomes an optical output control same as AQ4320A.

Artisan Scientific - Quality Instrumentation ... Guaranteed | (888) 88-SOURCE | www.artisan-scientific.com

Chapter 9 Troubleshooting Guide

(1) The AQ4320 does not operate when powered on.

- Check the power fuse at the analyzer rear panel.
- There is a possibility consuming the battery.
  For replacement, contact the nearest sales office or agency.
  (Backup battery type name: CR2450)

(2) No optical power is output.

- Make sure that the LD ON/OFF switch is ON.
- Check the optical fibers for poor connection.
- Check the connector adapter for incorrect mounting.
- Check the REMOTE SW CONNECTOR connection at the rear panel.

(3) The optical output is blow the standard.

- Check the optical outputs and connected optical fiber ends for dirt and foreign materials.
- Check the CW or CHOP setup.
- Check the optical output level setup.
- Check the optical fiber connection.
- Check the connector adapter.
- Check the insertion loss of optical fibers.

(4) The optical output level is unstable.

- Check the terminals of AQ4320 optical output section for scratches and dirt.
- Warning! Turn the AQ4320 power switch OFF and make sure that no beams are emitted at all. Then, check the connected optical fiber ends for scratches and dirt using a microscope or others.
- Make sure that the connected optical fibers are UPC polished (the reflection attenuation must be 50dB or higher).

(5) No keys operate, or the optical output does not turn On or Off.

- Release the AQ4320 from Remote control mode (via GPIB or RS-232C interface).
- Disconnect the attached keyboard.

Artisan Scientific - Quality Instrumentation ... Guaranteed | (888) 88-SOURCE | www.artisan-scientific.com

Chapter 10 Maintenance

This chapter provides the routine maintenance guidance information.

10.1 Instruments and Tools required

Table 10-1 lists the instruments you need to prepare during maintenance.

Table 10-1: List of test instruments

Note: The Ando's equivalent instrument is shown in parentheses.

Instrument	Basic performance
AQ2140 optical multimeter	
Optical power meter (Combination of AQ2140 and AQ2733)	Power measuring range: -110 to +10 dBm Wavelength range: 0.7 to 1.7 micrometers
Optical spectrum analyzer (AQ6315A)	Wavelength range: 0.35 to 1.75 micrometers Resolution: 0.05 nm
Optical fiber cord	Single-mode optical fiber cord (short scale cord), FC/SPC
Optical frequency counter	

10.2 Periodical Inspection

As the AQ4320 has been designed to have the highest possible stability and reliability, you need to inspect your AQ4320 once a half year only in the following procedure.

⚠ Caution

Do not touch inside of AQ4320.

---

(1) Absolute wavelength and stability

Select the CW optical output mode, and measure the absolute wavelength and wavelength stability using an optical frequency counter.

(2) Optical output level and stability

Set the output wavelength of each unit to CW mode, connect an optical power meter to the AQ4320 using a 2-meter long short fiber, and measure the optical output level and stability.

Artisan Scientific - Quality Instrumentation ... Guaranteed | (888) 88-SOURCE | www.artisan-scientific.com

(3) SMSR

Select the CW optical output mode, and set the optical output to its maximum level. Then, measure the SMSR using an optical spectrum analyzer.

(4) Optical output flatness

Select the CW optical output mode, and set the optical output to the MAX value in the minimum wavelength (Refer to Table 5-1 Wavelength range set). Change the wavelength every 100pm within the wavelength range, and check the optical power on the power meter.

(5) Optical output mode

Make sure that the CHOP optical output level (at 0.27kHz, 1kHz, and 10kHz) reaches approximately -3dB on the power meter when the optical output level is set to 0dB.

10.3 Cleaning

The AQ4320 must always be kept clean as its optical output level and stability drop if its optical output section is contaminated by dusts or others. Carefully wipe and clean the optical fibers using an alcohol before connecting them to your AQ4320. We recommend to use an NTT International's Cletop stick cleaners for cleaning.

Artisan Scientific - Quality Instrumentation ... Guaranteed | (888) 88-SOURCE | www.artisan-scientific.com

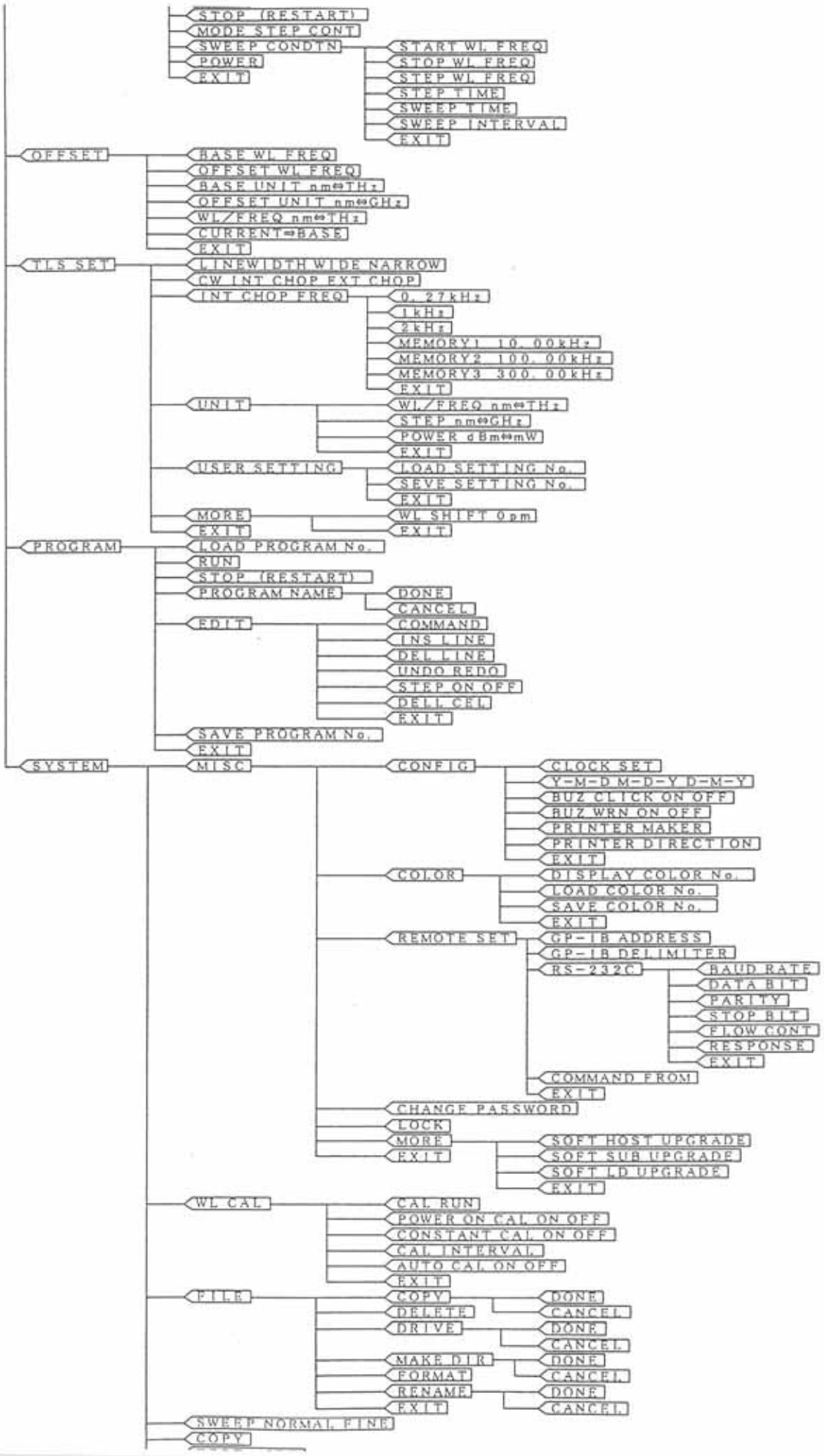

Artisan Scientific - Quality Instrumentation ... Guaranteed | (888) 88-SOURCE | www.artisan-scientific.com

Artisan Scientific - Quality Instrumentation ... Guaranteed | (888) 88-SOURCE | www.artisan-scientific.com

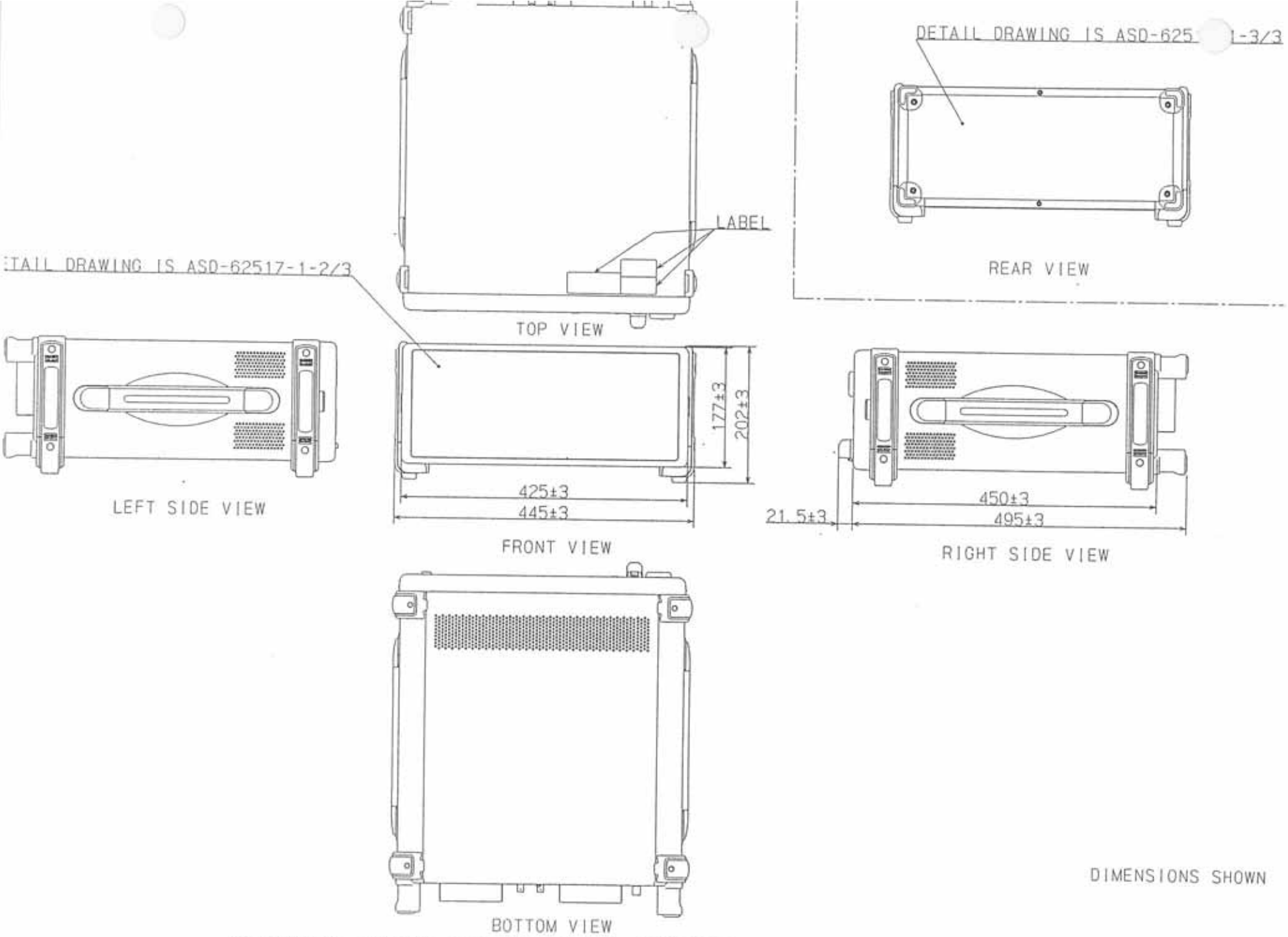

DIMENSIONS SHOWN

OUTSIDE VIEW OF A043208 TUNABLE LASER SOURCE

Artisan Scientific - Quality Instrumentation ... Guaranteed | (888) 88-SOURCE | www.artisan-scientific.com

Artisan Scientific - Quality Instrumentation ... Guaranteed | (888) 88-SOURCE | www.artisan-scientific.com

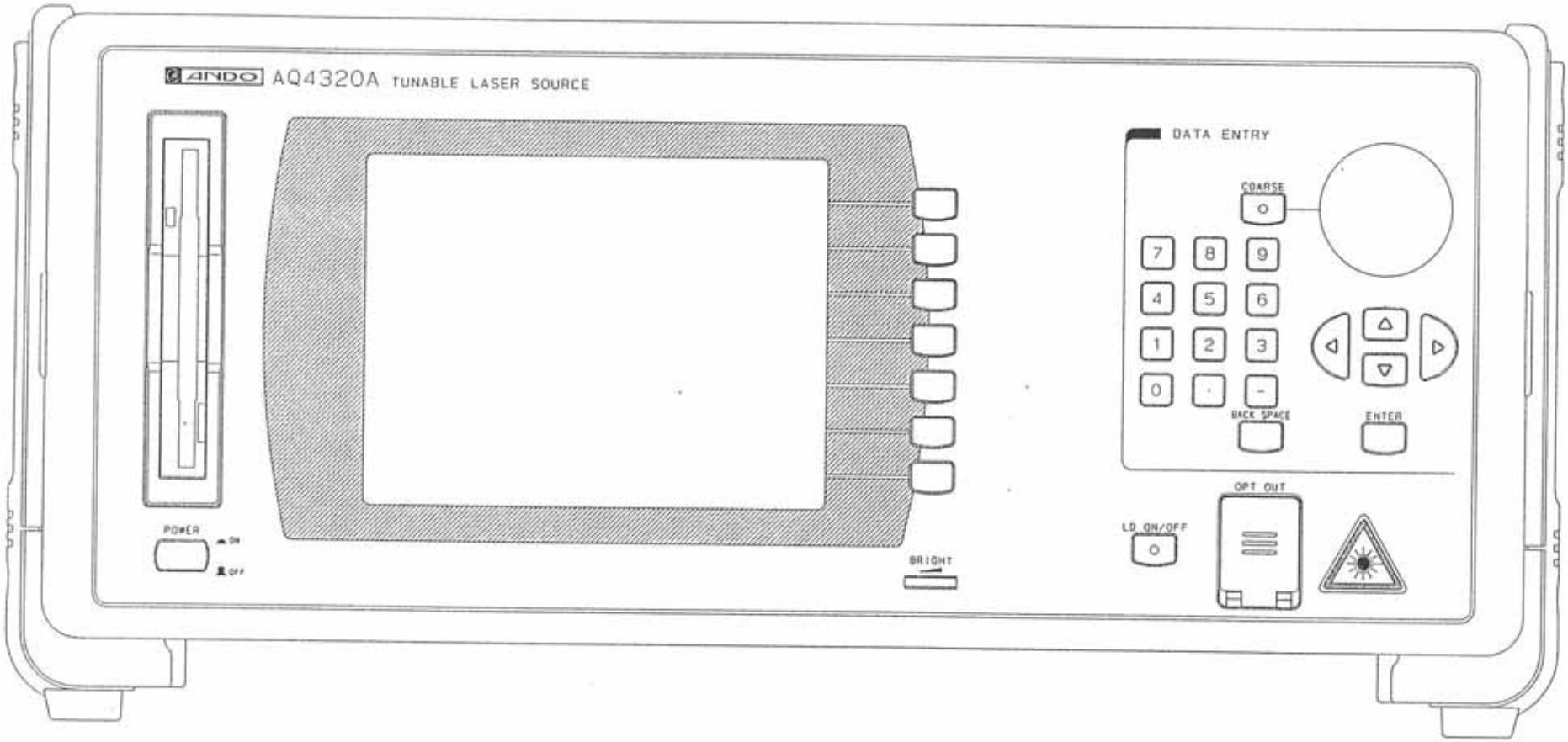

OUTSIDE VIEW OF AQ4320A TUNABLE LASER SOURCE
(FRONT)

Artisan Scientific - Quality Instrumentation ... Guaranteed | (888) 88-SOURCE | www.artisan-scientific.com

Artisan Scientific - Quality Instrumentation ... Guaranteed | (888) 88-SOURCE | www.artisan-scientific.com

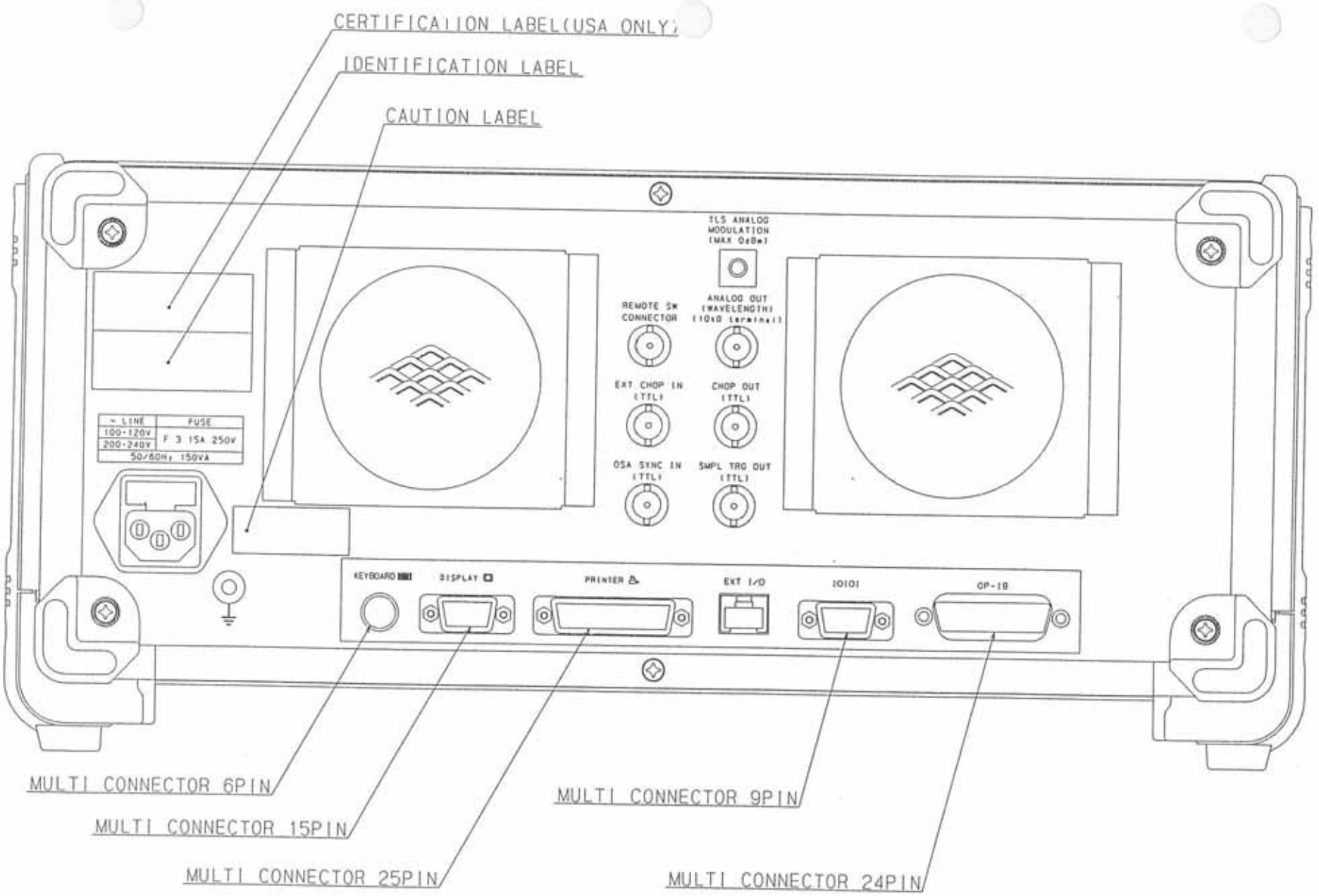

OUTSIDE VIEW OF AQ4320A TUNABLE LASER SOURCE
(REAR)

ASD-62517-1

Artisan Scientific - Quality Instrumentation ... Guaranteed | (888) 88-SOURCE | www.artisan-scientific.com

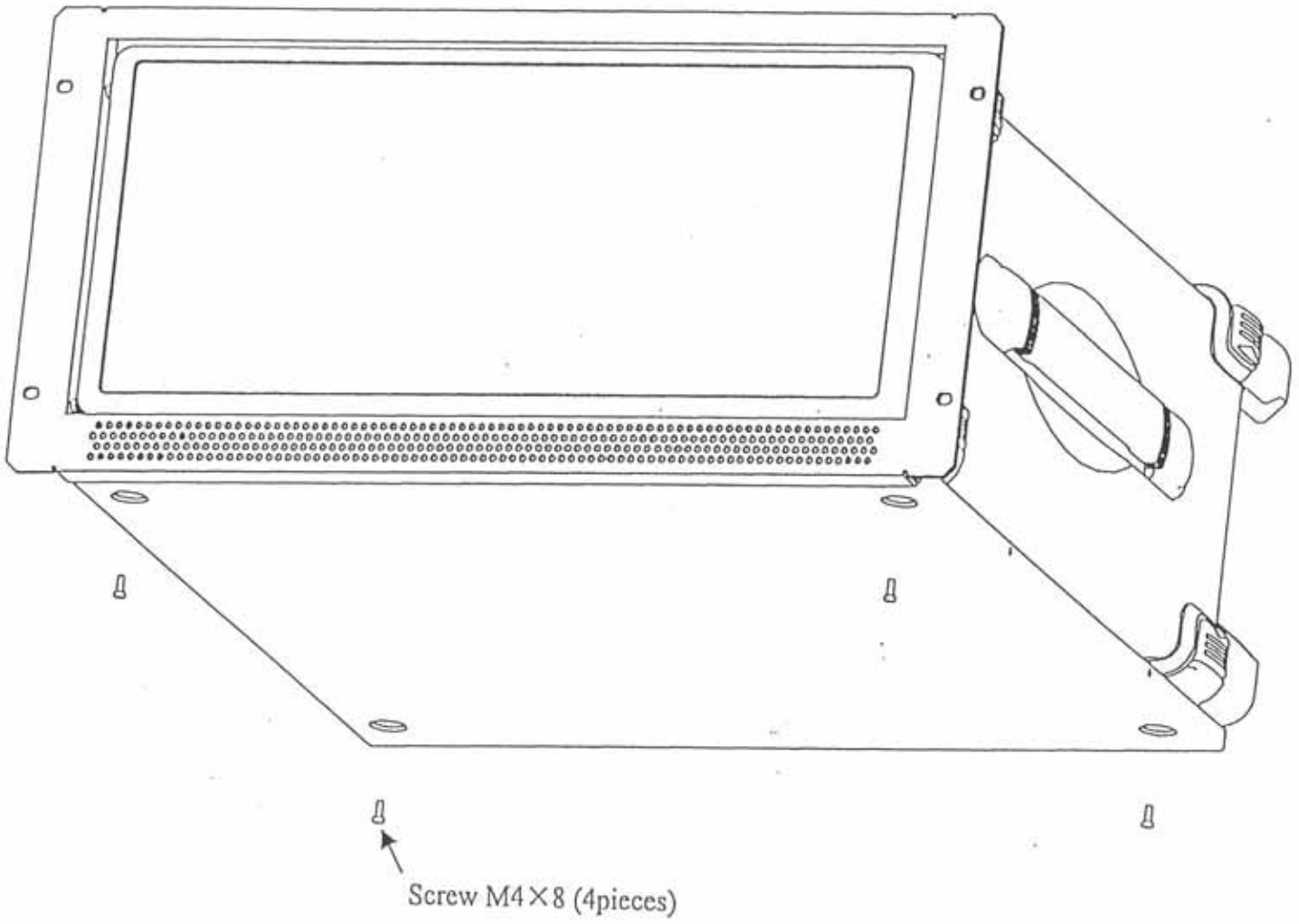

Assembly chart of Rack Mount kit for AQ432C

Artisan Scientific - Quality Instrumentation ... Guaranteed | (888) 88-SOURCE | www.artisan-scientific.com

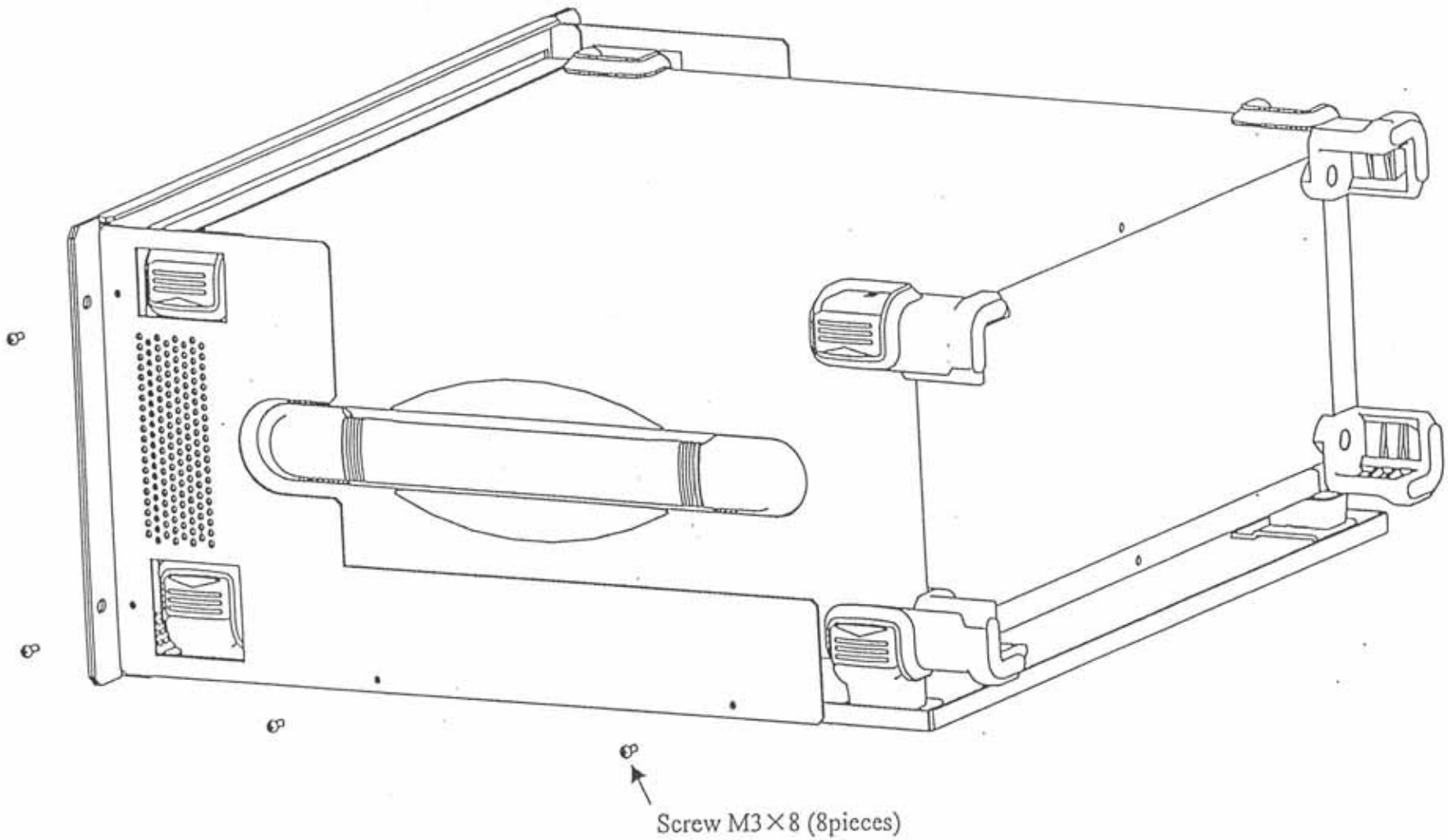

Assembly chart of Rack Mount kit for AQ4320

Artisan Scientific - Quality Instrumentation ... Guaranteed | (888) 88-SOURCE | www.artisan-scientific.com

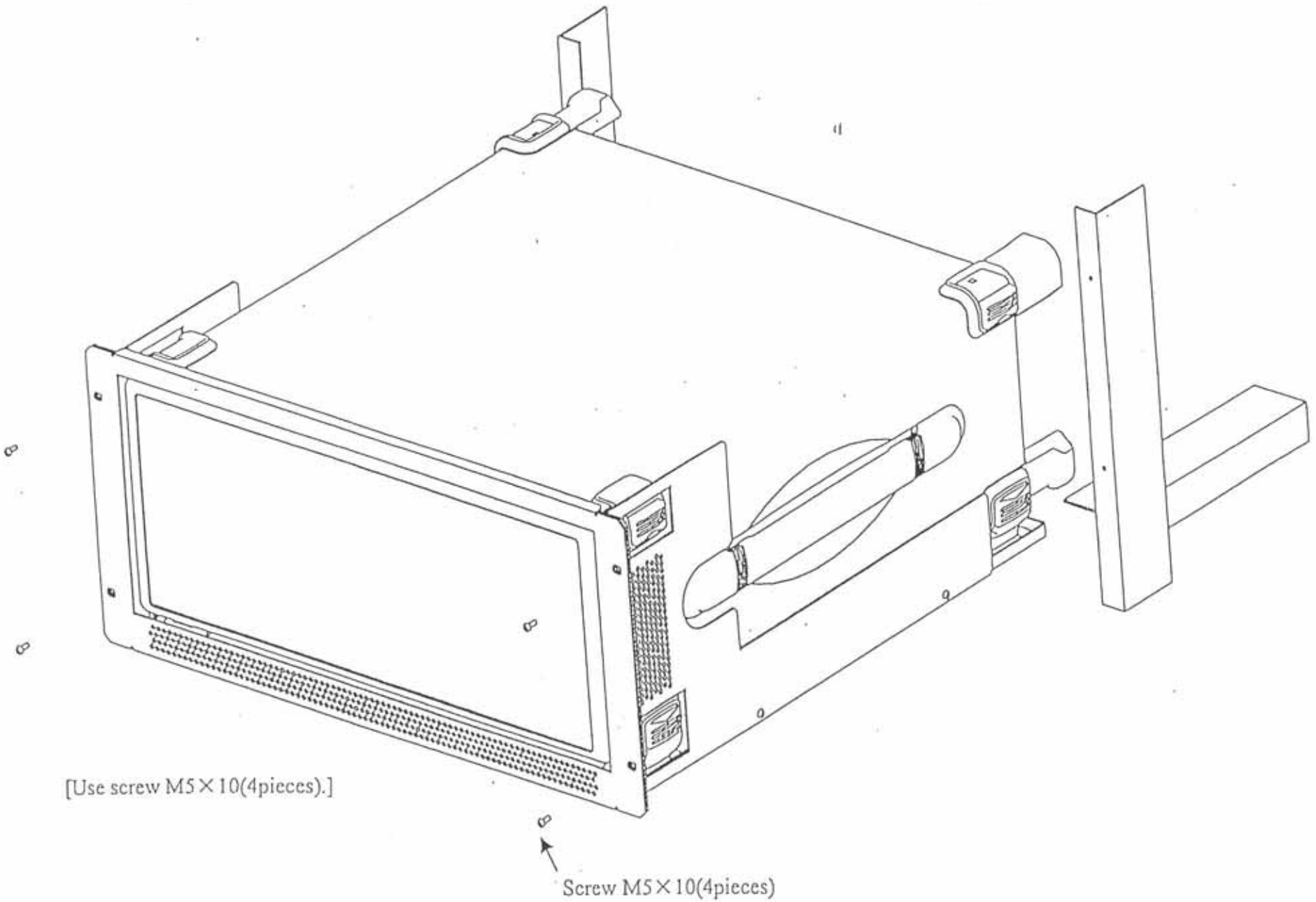

Assembly chart of Rack Mount kit for AQ432(

Artisan Scientific - Quality Instrumentation ... Guaranteed | (888) 88-SOURCE | www.artisan-scientific.com



Looking for more information?

Visit us on the web at **http://www.artisan-scientific.com** for more information:

• Price Quotations • Drivers • Technical Specifications, Manuals and Documentation

Artisan Scientific is Your Source for Quality New and Certified-Used/Pre-owned Equipment

- Tens of Thousands of In-Stock Items
- Hundreds of Manufacturers Supported
- Fast Shipping and Delivery
- Leasing / Monthly Rentals
- Equipment Demos
- Consignment

Service Center Repairs

Experienced Engineers and Technicians on staff in our State-of-the-art Full-Service In-House Service Center Facility

InstraView™ Remote Inspection

Remotely inspect equipment before purchasing with our Innovative InstraView™ website at **http://www.instraview.com**

We buy used equipment! We also offer credit for Buy-Backs and Trade-Ins

Sell your excess, underutilized, and idle used equipment. Contact one of our Customer Service Representatives today!

Talk to a live person: 888-88-SOURCE (888-887-6872) | Contact us by email: sales@artisan-scientific.com | Visit our website: http://www.artisan-scientific.com